Culinaire®

SPECIFICATION, INSTALLATION AND OPERATION MANUAL

READ ALL INSTRUCTIONS BEFORE USE

Slimline Mobile Refrigerated Island Buffets
(Angled Perspex Gantry & Flat Glass)



Models:
CR.IB.CLCBF.GCP.6 / CR.IB.CLCBF.GCP.8
CR.IB.CLCBF.GCF.6 / CR.IB.CLCBF.GCF.8

A guide on the use, care and maintenance
of your quality Culinaire product

innovative solutions

STODDART®

Revision: H - 30/04/2025 - 01

Page Intentionally Left Blank

Due to continuous product research and development,
the information contained herein is subject to change without notice.

1.0 Introduction

1.1 Your New Culinaire Product 3
1.2 Australia and New Zealand Warranty 4
1.2.1 Warranty Period
1.2.2 Warranty Registration
1.3 General Precautions 4

2.0 Installation

2.1 Product Overview. 5
2.2 Setting Up 6
2.2.1 Handling
2.2.2 Unpacking
2.2.3 Positioning
2.3 Refrigeration 7
2.4 Electrical Connection 7
2.5 Plumbing Connections 7
2.6 Buffet Dividers & Tray Race (Optional) 8
2.6.1 Island Buffet Dividers
2.6.2 Tray Race (Optional)
3.1 Slimline Mobile Refrigerated Island Buffets 9

4.0 Operation

4.1 Initial Start-up & Operation 10
4.1.1 Control Panel
4.1.2 Initial Start Up
4.1.3 Drainage Pans
4.1.4 Operation
4.1.5 Loading Restrictions
4.1.6 Defrost Cycle
4.1.7 After Service - Information
4.4 Temperature Adjustment 12

5.0 Cleaning and Maintenance

5.1 Cleaning 13
5.1.1 General Information
5.1.2 Corrosion Protection
5.1.3 Surface Finish
5.1.4 Cleaning and Maintenance Schedule
5.1.5 Materials Required
5.1.6 Cold Well (Daily)
5.1.7 Sneeze Guard
5.1.8 External Surfaces
5.1.9 Ventilation Panels
5.1.10 Base Cavity, Evaporator Coil
5.1.11 Condenser
5.2 Troubleshooting 15
5.2.1 Troubleshooting Procedures
5.2.2 Alarm Signals
Disposal 16

Due to continuous product research and development,
the information contained herein is subject to change without notice.

1.1 Your New Culinaire Product

Thank you for choosing this quality Culinaire product.
All Culinaire products are designed and manufactured to meet the needs of food service professionals. By caring for and maintaining this new Culinaire product in accordance with these instructions, will provide many years of reliable service.

Stoddart is a wholly Australian owned company, which manufactures and/or distributes a comprehensive range of food service equipment for kitchens, food preparation and presentation. Stoddart products are manufactured and engineered to provide excellent results whilst offering value-for-money, ease-of-use and reliability.

Carefully read this instruction booklet, as it contains important advice for safe installation, operation and maintenance. Keep this booklet on hand in a safe place for future reference by other operators or users.

Disclaimer

The manufacturer/distributor cannot be held responsible or liable for any injuries or damages of any kind that occur to persons, units or others, due to abuse and misuse of this unit in regards to installation, removal, operation, servicing or maintenance, or lack of conformity with the instructions indicated in this documentation.

All units made by the manufacturer/distributor are delivered assembled, where possible, and ready to install. Any installation, removal, servicing, maintenance and access or removal of any parts, panels or safety barriers that is not permitted, does not comply in accordance to this documentation, or not performed by a **TRAINED AND AUTHORISED SPECIALIST** will result in the **IMMEDIATE LOSS OF THE WARRANTY.**

The manufacturer/distributor cannot be held responsible or liable for any unauthorised modifications or repairs. All modifications or repairs must be approved by the manufacturer/distributor in writing before initiating. All modifications or repairs performed to this unit must be performed at all times by a **TRAINED AND AUTHORISED SPECIALIST.**

Stoddart design, manufacture & distribute Food Service Equipment (appliances) exclusively for the commercial market. This appliance is not designed nor intended for household or domestic use and must not be used for this purpose.

This product is intended for commercial use, and in line with Australian electrical safety standards the following warnings are provided:

- This product is not intended for use by persons (including children) with reduced physical, sensory or mental capabilities, or lack of experience and knowledge, unless they have been given supervision or instruction concerning the use of the product by a person responsible for their safety. Children should be supervised to ensure that they do not play with the product
- If the supply cord is damaged, it must be replaced by the manufacturer, its service agent or similarly qualified persons in order to avoid a hazard

Warranty & Registration

1.2 Australia and New Zealand Warranty

1.2.1 Warranty Period

All Stoddart manufactured and distributed products are covered by Stoddart's standard Australia and New Zealand Product Warranty (minimum 12 month on-site parts and labour, terms and conditions apply). Further to this standard warranty, certain products have access to an extended warranty. Full terms, conditions and exclusions can be found using the below Link/QR code.

1.2.2 Warranty Registration

To register your new product, Follow the below Link/QR code.

Australia
www.stoddart.com.au/warranty-information

New Zealand
https://stoddart.co.nz/warranty-information

1.3 General Precautions

When using any electrical unit, safety precautions must always be observed.

Our units have been designed for high performance. Therefore, the unit must be used exclusively for the purpose for which it has been designed.

- All units MUST be installed according to the procedures stated in the installation section of this manual
- In the case of new personnel, training is to be provided before operating the equipment
- **DO NOT** use this unit for any other purpose than its intended use
- **DO NOT** store explosive substances such as aerosol cans with a flammable propellant in or near this unit
- Keep fingers out of "pinch point" areas
- Unit is not waterproof **DO NOT** use jet sprays, hoses or pour water over/on the exterior of the unit
- Only use this unit with voltage specified on the rating label
- **DO NOT** remove any cover panels that may be on the unit
- **DO NOT** use sharp objects to activate controls
- **DO NOT** use sharp objects to remove ice from the unit
- If any fault is detected, refer to troubleshooting
- The manufacturer declines any liability for damages to persons and/or things due to an improper/wrong and/or unreasonable use of the machine
- Only specifically trained/qualified Technicians (Stoddart, one of our service agents, or a similarly qualified persons) should carry out any and all repairs, maintenance and services

Due to continuous product research and development,
the information contained herein is subject to change without notice.

2.1 Product Overview

	**IMPORTANT** **This unit is not designed to cool down hot/warm product. It only maintains the product at the controlled 2°C - 4°C**

	**CAUTION** **This unit includes refrigeration components. Cold surfaces can burn DO NOT touch these surfaces**



2.2 Setting Up

WARNING

Improper installation, adjustments, alterations, service or maintenance can cause property damage, injury or death.

2.2.1 Handling

- Use suitable means to move the unit;
  - For smaller items use two people
  - For large items a fork lift, pallet trolley or similar (the forks should reach completely beneath the pallet)

2.2.2 Unpacking

- Check the unit for damage before and after unpacking. If unit is damaged, contact the distributor and manufacturer
- Should any item have physical damage, report the details to the freight company and to the agent responsible for the dispatch within 48 hours of receipt. No claims will be accepted or processed after this period
- The unit is supplied fully assembled
- Remove all protective plastic film, tapes, ties and packers before installing and operating
- Clean off any remaining residue from the interior/exterior of the unit using a clean cloth dampened with warm soapy water

2.2.3 Positioning

- When moving the unit, ensure the cabinet is upright at all times
- When positioning the unit, avoid direct sunlight, warm drafts and heated areas for the unit to maintain the normal operating temperature
- Do not position the unit in:
  - Wet areas
  - Near heat and/or steam sources
  - Near flammable substances
- Ensure the unit is positioned on a level surface to allow all the condensation to properly burn off and prevent the burn off tray overflowing
- Allow an air gap between the unit and other objects or surfaces. A minimum gap of 100mm from all sides is recommend for normal operational use (if the unit is near any heat sensitive material we suggest you allow additional space), example below

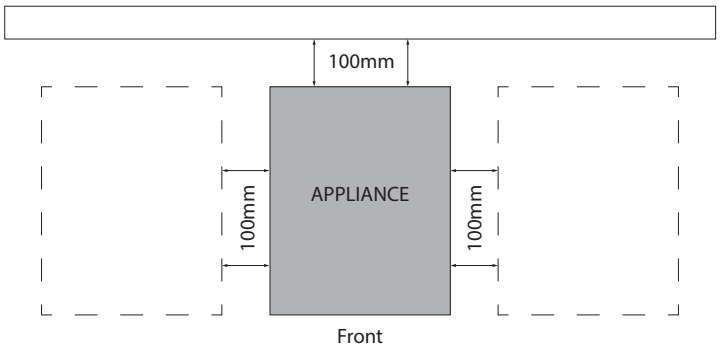

- After positioning the unit, allow the refrigeration gas to settle for at least 2 hours before switching ON
- Please consult national and local standards to ensure that your unit is positioned in accordance with any existing requirement

Due to continuous product research and development,
the information contained herein is subject to change without notice.

2.3 Refrigeration

The system is fully operational as soon as it leaves the factory. No addition setup is required.

- This unit designed for R134a refrigerant.

2.4 Electrical Connection

WARNING

This unit must be installed in accordance with AS/NZS 60335.1

Some procedures in this manual require the power to the equipment to be turned off and isolated. Turn the power OFF at the power point and unplug the power supply lead by the plug body. If the power point is not readily accessible turn the equipment off at the isolation switch or the circuit breaker in the switchboard. Attach a yellow "CAUTION-DO NOT OPERATE" tag. This must be performed where relevant unless the procedures specify otherwise. FAILURE TO DO SO MAY RESULT IN ELECTRIC SHOCK.

Single Phase Units:

- Supplied and fitted with an appropriately rated plug and lead, indicated as:
  - 10A plug & lead fitted

Notes:

- If the supply cord is damaged, it must be replaced by the manufacturer, its service agent or similarly qualified persons in order to avoid a hazard. Please contact Stoddart for parts and we will advise how to do this in order to avoid any electrical hazard
- The power cable should be dry and/or isolated from moisture or water

2.5 Plumbing Connections

- No additional drainage or plumbing is required for the drainage pan

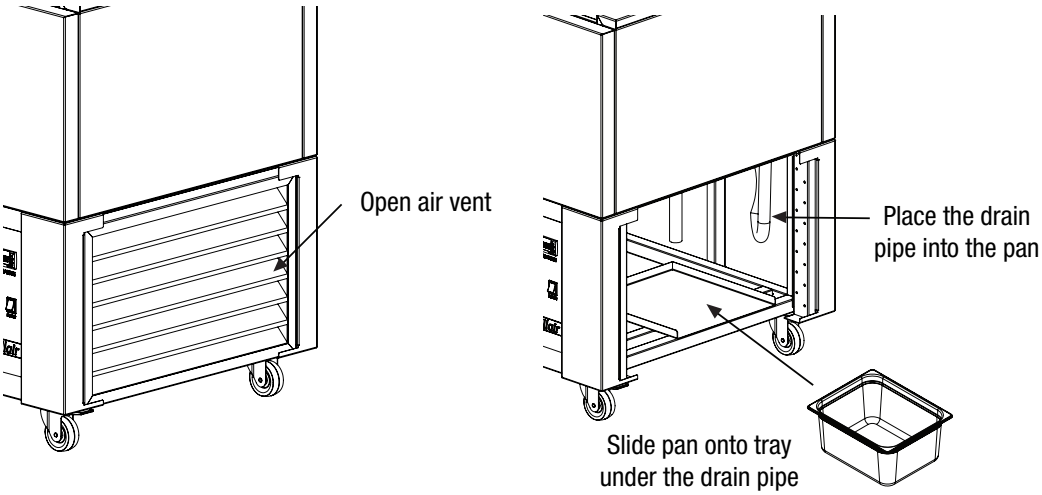

Due to continuous product research and development, the information contained herein is subject to change without notice.

2.6 Buffet Dividers & Tray Race (Optional)

2.6.1 Island Buffet Dividers

- Install as shown when 1/1 module dividers are provided
- 1/6, 1/9 dividers sit on the top of the module dividers and the top of the well. To setup, clip the length divider(s) into width divider(s).

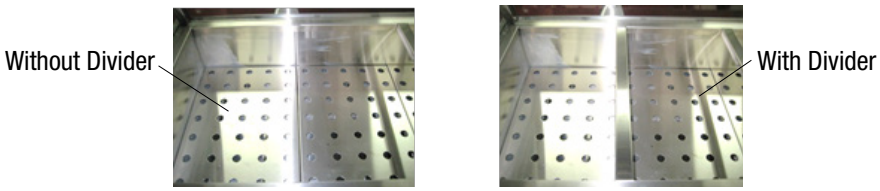

2.6.2 Tray Race (Optional)

- Two tray races are placed per side
- The lips of the tray race clip into the slots on side of the unit

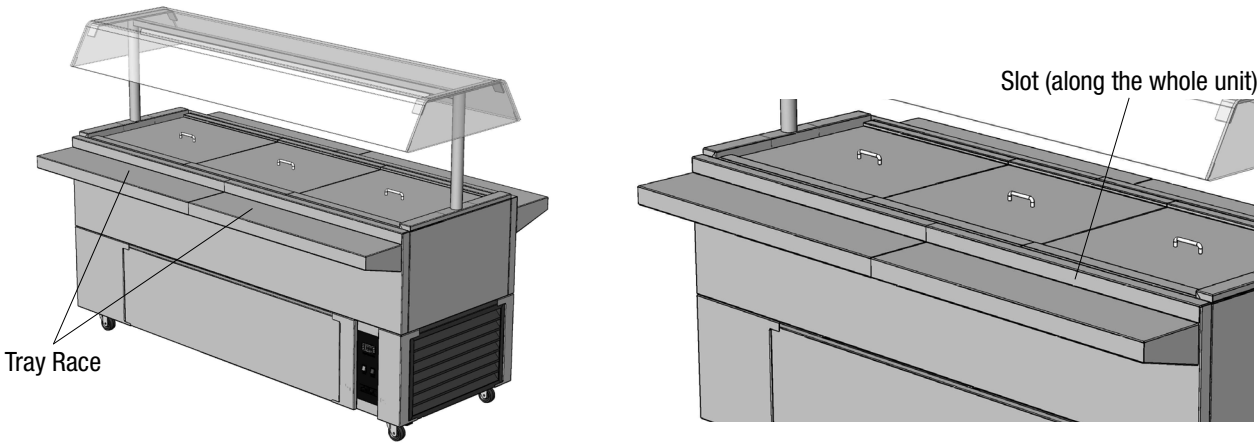

Due to continuous product research and development,
the information contained herein is subject to change without notice.

3.1 Slimline Mobile Refrigerated Island Buffets

Model	CR.IB.CLCBF.GCP.6	CR.IB.CLCBF.GCP.8	CR.IB.CLCBF.GCF.6	CR.IB.CLCBF.GCF.8
W x D x H (mm)	2160 x 750 x 1525	2885 x 750 x 1525	2160 x 750 x 1330	2885 x 750 x 1330
Total Connected Load	1.44kW	2.28kW	1.44kW	2.28kW
Electrical Connection	1Ø+N+E 240VAC / 50Hz (10A Plug & Lead Fitted)	1Ø+N+E 240VAC / 50Hz (10A Plug & Lead Fitted)	1Ø+N+E 240VAC / 50Hz (10A Plug & Lead Fitted)	1Ø+N+E 240VAC / 50Hz (10A Plug & Lead Fitted)
Refrigerant	R134a	R134a	R134a	R134a

Due to continuous product research and development,
the information contained herein is subject to change without notice.

4.1 Initial Start-up & Operation

IMPORTANT

This unit is not designed to cool down products, it only maintains them at the regulated 2°C to 4°C serving temperature.

4.1.1 Control Panel

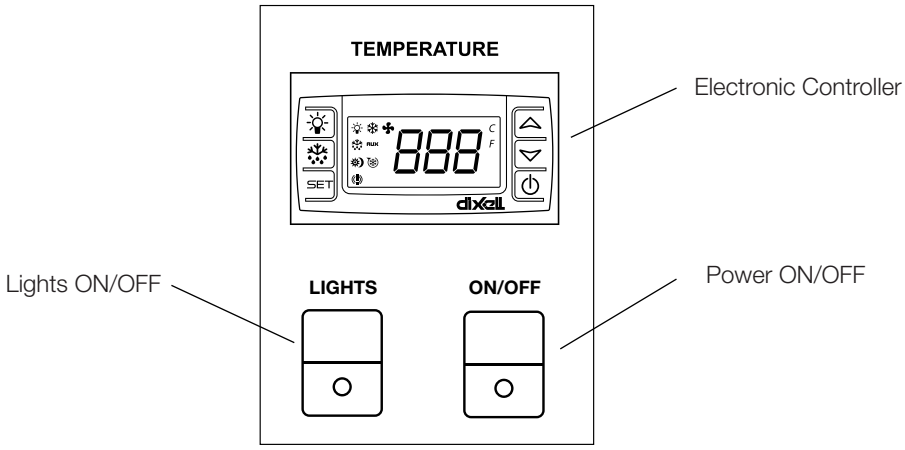

4.1.2 Initial Start Up

- Before switching ON the unit, ensure the unit is installed correctly
- Once switched ON, check that the air is flowing within the unit. Check the lights are switched on
- After 45 minutes check the temperature has reached 2°C - 4°C
- Leave the unit to operate for 3-4 hours to remove any fumes or odours
- Your unit is now ready to operate

4.1.3 Drainage Pans

- Install the drainage pan before switching the unit ON.
- All condensate water MUST be treated as waste water. Do NOT drink and serve to persons.
- When the unit has been switched OFF, the unit still produces condensation. Drainage pans should remain in place.
- In humid environments, more condensation is produced, check and replace the receptacle approximately every 3 hours.
- Ensure no items are stored around the ventilation slots.

4.1.4 Operation

- Switch ON 45 minutes prior to loading the well with product. Lights should be switched ON when the unit is in use.
- Food should be placed in the well 20 to 30 minutes prior to service. Night covers should be placed over the well until the food is being served.
- Only pre-chilled product should be placed in the unit.
- Do NOT replenish product in old pans, clean pans before using again. Each pan should only have 1 type of product to prevent cross contamination.
- No objects should be placed/stored on the sneeze guard; items may be crack or fracture the glass.
- All products MUST be displayed in the pans.
- At the end of food service, remove product and pans, and switch the power OFF. Ensure the unit is cleaned at the end of the day. Once completed replace the night covers.
- The drainage receptacle should be checked and emptied every 3 hours. Different emptying times may be required for different conditions.

Due to continuous product research and development,
the information contained herein is subject to change without notice.

4.1.5 Loading Restrictions

- The unit MUST not be loaded when being moved.
- Air grills on the sides must NOT be covered.
- Pans MUST not be overflowing, as this will restrict airflow.
- Items, other than the gastronorm pans, should NOT be placed on the dividers.
- Ensure no items are stored around the ventilation slots.

4.1.6 Defrost Cycle

- The system has an automatic defrost system which improves the energy efficiency of the unit and minimises temperature fluctuations
- After the unit is first switched ON the first defrost cycle will occur automatically after 3 hours. If the unit is NOT turned OFF, the unit will defrost automatically 8 times per day or every 3 hours
- If air is not circulating properly a manual defrost cycle can be made. Normal automatic defrost cycles will still occur every 3 hours even if a manual cycle has been run in between cycles. Check the electronic controller section for more information
- The defrost cycle terminates when the temperature of the evaporator coil rises to 6°C or after 30 minutes. Products will remain refrigerated during defrost cycle if the doors remain closed
- For changing of defrost cycle settings, contact Stoddart or an approved service technician

4.1.7 After Service - Information

- The unit must be turned off after service period
- Unit must be emptied and cleaned when switched off
- All pans should be cleaned and placed in night storage. No pans should be left in the unit
- There Must be no food items left in the unit
- Empty the drainage receptacle, clear all water

Due to continuous product research and development,
the information contained herein is subject to change without notice.

4.4 Temperature Adjustment

- The temperature can be set between 65°C and 95°C. How to set the temperature is shown below
- Different modes require different temperatures
- The temperature probe only measures the temperature of the water/air, NOT the food temperature

DIXEL CONTROL:

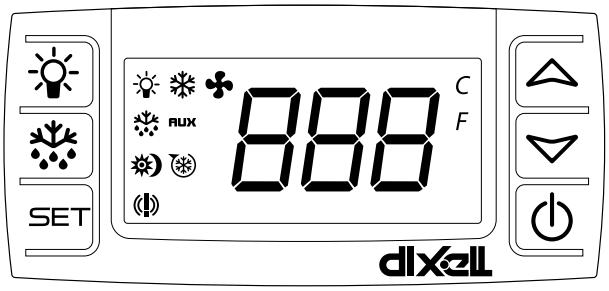

DISPLAY:

LED	MODE	DESCRIPTION
❄	On	Compressor enabled
	Flashing	Anti short cycle delay enabled (AC parameter)
❄	On	Defrost in progress
	Flashing	Dripping in progress
✣	On	Fans output enabled
	Flashing	Fans delay after defrost
(!)	On	An alarm is occurring
❄	On	Continuous cycle is running
☼	On	Energy saving enabled
°C/°F	On	Measurement unit
	Flashing	Programming mode

KEY FUNCTIONS:

SET	To display target set point; in programming mode it selects a parameter or confirm an operation.
❄ (DEF)	To start a manual defrost push and hold the defrost button ❄ for 2 seconds.
∧ (UP)	To see the maximum stored temperature; in programming mode it browses the parameter codes or increases the displayed value.
∨ (DOWN)	To see the minimum stored temperature; in programming mode it browses the parameter codes or increases the displayed value.
⏻	To switch the instrument OFF, if onF = oFF.
☼	Not enabled.

KEY COMBINATIONS:

∧ + ∨	To lock and unlock the keyboard.
SET + ∨	To enter in programming mode.
SET + ∧	To return to the room temperature display.

HOW TO SEE THE SET POINT:

1. Push and immediately release the **SET** key, the display will show the set point value
2. Push and immediately release the **SET** key or wait 5 seconds to display the probe value again

HOW TO CHANGE THE SET POINT:

1. Push the **SET** key for more than 3 seconds to change the set point value
2. The value of the set point will be displayed and the "°C" LED starts blinking
3. To change the set point value push the ∧ or ∨ arrows within 10 seconds
4. To store the new set point value push the **SET** key again or wait 10 seconds

HOW TO CHANGE A PARAMETER VALUE:

1. Enter the Programming mode by pressing the **SET** + ∨ keys for 3s (°C LED starts blinking)
2. Select the required parameter. Press the **SET** key to display its value
3. Use ∧ or ∨ to change the parameter value
4. Press SET to store the new parameter value and move to the following parameter
5. To Exit: Press **SET** + ∧ or wait 15 seconds without pressing any keys

Note: The set value is stored even when the procedure is exited by waiting the time-out to expire.
Note: To enter in programming mode. (Contact the Stoddart Service Department)

HOW TO LOCK/UNLOCK THE KEYBOARD:

1. To lock the keyboard press and hold the ∧ + ∨ for 3 seconds. The "OF" message will be displayed
2. To unlock the keyboard press and hold the ∧ + ∨ for 3 seconds. The "ON" message will be displayed

Due to continuous product research and development,
the information contained herein is subject to change without notice.

5.1 Cleaning

IMPORTANT

Threaded fasteners can loosen in service. Regular inspection and adjustment should be carried out as required

WARNING

This unit is NOT waterproof, DO NOT hose. DO NOT pour water directly onto the unit. DO NOT immerse in water

IMPORTANT

Some commercial stainless steel cleaners leave residue or film on the metal that may entrap fine particles of food, deeming the surface not FOOD SAFE

WARNING

**This unit includes refrigeration components.
Cold surfaces can burn DO NOT touch these surfaces**

5.1.1 General Information

- Cleaning is recommended for health and safety purposes and to prolong the life of the unit
- **DO NOT** use abrasive pads or cleaners on the stainless steel or any other metal parts of the unit
- **DO NOT** use industrial chemical cleaners, flammable cleaners, caustic based cleaners or bleaches and bleaching agents, as many will damage the metals and plastics used on this unit
- **DO NOT** remove any screws and/or panels for cleaning (unless directed)
- This unit is **NOT** waterproof, **DO NOT** hose, **DO NOT** pour water directly onto the unit, **DO NOT** immerse in water

5.1.2 Corrosion Protection

- Stainless steel exhibits good resistance to corrosion however, if not properly maintained stainless steel can rust and/or corrode
- Any sign of mild rust and/or corrosion should be thoroughly cleaned with warm soapy water and dried as soon as possible
- NEVER use abrasive pads or cleaners for cleaning
- All metal surfaces should be checked while cleaning for damage, scuffs or scrapes as these can lead to rust and further damage to the product
- Mild rust and/or corrosion can be treated with a commercial cleaning agent that contains citric/oxalic/nitric/phosphoric acid.
  DO NOT use cleaning agents with chlorines or other harsh chemicals as this can cause corrosion.
  After treatment, wash with warm (not hot) soapy water and dry thoroughly
- Thoroughly wipe the surfaces dry after cleaning. **DO NOT** let water pool on the unit. Check crevices and folds for pooling
- When using, ensure all liquids and moisture is cleaned up straight away.
  Food liquids such as juices from vegetables and fruits should not be left on preparation surfaces
- **DO NOT** leave items on the stainless steel such as cutting boards, rubber mats and bottles

5.1.3 Surface Finish

- To protect the polished surface of the stainless steel, it should be dried using a clean dry soft cloth. A light oil can be applied to enhance the stainless steel surface, using a clean cloth apply the oil in the same direction as grained polished finish
- Some commercial stainless steel cleaners can leave residue or film on the metal; this may trap fine particles of food on the surface, thus deeming the surfaces not food safe

Due to continuous product research and development, the information contained herein is subject to change without notice.

5.1.4 Cleaning and Maintenance Schedule

- Daily cleaning is required for the unit. This will help to maintain and prolong the efficiency of your unit
- The unit should be cleaned at the end of each work day

5.1.5 Materials Required

- Stainless Cleaner
- Non Abrasive Cleaning pad
- Clean Sanitised Cloth
- Paper Towel
- Container of warm water
- Appropriate PPE (Personal Protective Equipment)

5.1.6 Cold Well (Daily)

1. Remove all night lids, GN pans and air panels and wash separately, using clean warm soapy water until all soil has been removed
2. Clean the cold well using a clean cloth dampened (not wet) with clean warm soapy water until all soil has been removed
3. Re-insert the air panels and night lids

5.1.7 Sneeze Guard

1. Do NOT remove the sneeze guard for cleaning
2. Clean the glass with glass cleaner or warm (not hot) soapy water, and a sponge
3. Remove water with a squeegee

5.1.8 External Surfaces

1. Using a clean cloth dampened (not wet) with clean warm soapy water until any grime has been removed
2. Using a clean sanitised cloth, thoroughly wipe the stainless steel and metal parts dry. Do NOT let water pool on the unit. Check crevices and folds

5.1.9 Ventilation Panels

1. Use a vacuum and/or brush to remove dust and debris from all ventilation panels
2. Do NOT use water or a hose to remove dust or debris

5.1.10 Base Cavity, Evaporator Coil

1. Access is via the panels in the bottom of the well.
2. Sweep out and vacuum. A wet-and-dry vacuum cleaner should be used.
3. Do NOT use water to clean the evaporator coil. Take care not to damage or move the temperature probe in the evaporator coil.
4. Wipe out the bottom with a damp sanitized cloth. Make sure that the condensate drain hole is cleared.
5. Do NOT pour water into the base cavity.

5.1.11 Condenser

Periodic cleaning of the condenser can extend the life of the unit. This must be done by a qualified service technician.
Contact the Stoddart service department

Due to continuous product research and development,
the information contained herein is subject to change without notice.

5.2 Troubleshooting

5.2.1 Troubleshooting Procedures

- If any faults/issues occur with the unit, follow the below troubleshooting procedures
- If the troubleshooting procedures do not correct the problem, contact the Stoddart Service Department

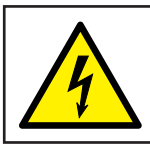

WARNING

Technician tasks are only to be completed by qualified service people. Check faults before calling service technician.

Problem	Possible Causes	Possible Corrective Action
Unit does not operate/start	The mains isolating switch on the wall, circuit breaker or fuses are OFF at the power board	Turn isolating switch, circuit breaker or fuses ON
	The main switch of the unit is OFF	Turn the main switch ON
	Condenser unit is OFF	Turn ON condenser unit
	Electrical wiring damaged	Contact Stoddart service department
	Condenser unit broken	Contact Stoddart service department
	Faulty electronic controller	Contact Stoddart service department
Unit is too warm	Ambient air entering the units	Door not closing / sealing
		Position unit away from drafts / airconditioning / ventilation vents
		GN pans in coldwell are over filled, remove some product from GN pan
	Warm items in unit	"Pre-chill / Remove items / Wait 30min for items to chill"
	Air not circulating	Remove some items / Clear air vents / Grills
	Too many items in the unit (overloaded)	Remove some items
	Items obstructing air vents / grills	Re-position items
	Defrost cycle is ON / just finished	Wait 30min for cabinet to cool
	Evaporator coil fins blocked	Clean fins / Run defrost cycle. Contact Stoddart service department if problem persists
	Evaporator coil iced up	Contact Stoddart service department
	Temperature probe broken / disabled	Contact Stoddart service department
	Set point temperature too high	Contact Stoddart service department
	Evaporator fans not operating	Contact Stoddart service department
	Undercharge	Contact Stoddart service department
	Faulty electronic controller	Contact Stoddart service department
	Direct sunlight	Block sunlight, window shades
Unit is too cold	Temperature probe broken/disabled	Contact Stoddart service department
	Faulty electronic controller	Contact Stoddart service department
	Set point temperature too low	Contact Stoddart service department

5.2.2 Alarm Signals

Display	Cause	Outputs
P1	Room probe failure	Compressor output according to “Con” and “COF”
P2	Evaporator probe failure	Defrost end is timed
P3	Third probe failure	Outputs unchanged
P4	Third probe failure	Outputs unchanged
HA	Maximum temp. Alarm	Outputs unchanged
LA	Minimum temp. Alarm	Outputs unchanged
HA2	Condenser high temperature	It depends on the “Ac2” parameter
LA2	Condenser low temperature	It depends on the “bLL” parameter
dA	Door open	Compressor and fans restarts
EA	External alarm	Outputs unchanged
CA	Serious external alarm (i1F=bAL)	All outputs OFF
CA	Pressure switch alarm (i1F=PAL)	All outputs OFF

Due to continuous product research and development,
the information contained herein is subject to change without notice.

Disposal

If the appliance is no longer of use, please dispose in an environmentally correct way.
Contact a qualified service technician:

- To recover all refrigerant
- To remove the compressor or remove the oil from the compressor

Page Intentionally Left Blank

The distributor / retailer can contact their local metal recycling centre to collect the remaining cabinet, shelves, etc.

There may be special requirements or conditions. Information on the disposal of refrigeration appliances can be obtained from:

- Your supplier
- Government authorities (The local council, Ministry of the Environment, etc.)



Discarded electric appliances are recyclable and should not be discarded in the domestic waste! Please actively support us in conserving resources and protecting the environment by returning this appliance to the collection centres (if available).



Dispose of packaging in accordance to applicable legal regulations.

Due to continuous product research and development,
the information contained herein is subject to change without notice.

Due to continuous product research and development,
the information contained herein is subject to change without notice.

Culinaire®

Australia

Australian Business Number: 16009690251

Service / Spare Parts

https://customerservice.stoddart.com.au

Sales

Tel: 1300 79 1954

Email: sales@stoddart.com.au

Web: www.stoddart.com.au

Customer Service Portal

New Zealand

New Zealand Business Number: 6837694

Service / Spare Parts

https://customerservice.stoddart.com.au

Sales

Tel: 0800 79 1954

Email: sales@stoddart.co.nz

Web: www.stoddart.co.nz

Customer Service Portal

STODDART®

innovative solutions