GIORIK
INNOVATIVE COOKING EQUIPMENT SINCE 1963

KORE

ESSENCE OF EVOLUTION **COMBI OVENS**



SPECIFICATION, INSTALLATION & OPERATION MANUAL

(READ ALL INSTRUCTIONS BEFORE USE)

Electric Models:
KB061WT / KB101WT

Gas Models:
KBG061WT / KBG101WT

innovative solutions

STODDART®

Revision: B - 07/08/2026 - 05

Page Intentionally Left Blank

1.0 Introduction

1.1 Your New Giorik Product 4
1.2 Australia and New Zealand Warranty 5
1.2.1 Warranty Period
1.2.2 Warranty Registration
1.3 General Precautions 6
1.3.1 General Warnings

2.0 Installation

2.1 Setting Up Information 7
2.1.1 Handling
2.1.2 Unpacking
2.1.3 Disposal
2.1.5 Stacked Installation
2.2.Positioning 8
2.2.1 General Information
2.2.2 Spacing
2.2.3 Levelling
2.3 Machine identification 10
2.3.1 Rating Plate - Check Before Installation
2.4 Electrical Connection 11
2.4.1 Information
2.4.2 Wiring (KB061WT / KB101WT)
2.5 Gas Connection (Gas Models Only) 13
2.5.1 Connecting the gas
2.5.3 On-site Commissioning Adjustment
2.5.4 Gas Conversion
2.5.5 Ventilation/Extraction
2.6 Water Connection. 16
2.6.1 Chloride Test
2.6.2 Total Dissolved Solids (TDS) Test
2.6.3 Filtration System
2.6.4 Reverse Osmosis Single Oven
2.6.5 Reverse Osmosis Stacked Oven
2.6.6 Standard Filter - Single Oven
2.6.7 Standard Filter - Stacked Oven
2.7 Drainage Connection 22
2.8 Liquid Detergent / Rinse Agent Connection 22
2.9 Optional Hand Shower with Magnetic Holder 23
2.10 Oven Testing 24
2.9.1 Gas Oven Operation

3.0 Specification

3.1 Technical Specifications 25
3.1.1 KB061WT
3.1.2 KB101WT
3.1.3 KBG061WT
3.1.4 KBG101WT

4.0 Operation

4.1 General Overview. 29
4.1.1 Control Interface
4.1.2 Gas Burner (Gas Models Only)
4.1.3 No Gas Alarm - Reset
4.1.4 Cooking Methods
4.1.5 How to Navigate
4.2 Setup - Configuration Menu 32
4.2.1 Initial Settings - Date and Time / Language
4.2.2 System Information
4.2.3 Display Brightness
4.2.4 Buzzer Volume
4.3 Manual Cooking 34
4.3.1 Initial Settings
4.3.2 Selecting The Cooking Method
4.3.3 Selecting The Temperature
4.3.4 Setting Preheating
4.3.5 Time Setting:
4.3.6 Core Probe:
4.3.7 Delta T(Δt):
4.3.8 Fan Rotation Speed
4.3.9 Humidity
4.3.10 Setting additional cooking phases (optional)
4.3.11 To Delete a Phase
4.3.12 Holding Phase
4.3.13 Setting New Phases With Text Messages
4.3.14 Saving a Recipe (optional)
4.3.15 Saved Recipes
4.3.16 Start Recipe
4.4 Automatic Cooking 45
4.4.1 Recipe Selection
4.4.2 How To Use The Automatic Cooking Program
4.5 Special Automatic Cooking Programs. 46
4.5.1 Regeneration
4.5.2 Rack Control - Manual Setting
4.5.3 Rack Control - Menu Setting
4.5.4 Rack Control - Easy Service
4.6 Special Functions. 50
4.6.1 Cooling Of The Chamber
4.6.2 Delayed Start
4.7 Importing / Exporting Recipes and Log To USB 51
4.7.1 Import / Export
4.8 Display LOG 52

Contents continued on next page

Due to continuous product research and development,
the information contained herein is subject to change without notice.

4.9 HACCP Protocol 52

5.0 Cleaning and Maintenance

5.1 Cleaning 53
5.1.1 Cleaning and Maintenance Schedule
5.1.2 Materials Required
5.1.3 General Information
5.1.4 Corrosion Protection
5.1.5 Surface Finish
5.1.6 Cleaning External Surfaces
5.1.7 Cleaning Internal Cavity
5.1.8 Cleaning Glass Door
5.1.9 Cleaning Internal Rack
5.1.10 Inspect Door Seal
5.1.11 Inspect Light Switch
5.1.12 Rinse Head
5.2 Automatic Cleaning. 57
5.2.1 Wash Selection
5.2.2 Start the Wash Program
5.2.3 Stop the Wash Program
5.3 Boiler Descaling 59
5.3.1 Automatic
5.3.2 Manual
5.4 Liquid Detergent / Rinse Agent Connection 60
Rinse Head
5.5 Water Filtration 60
5.6 Troubleshooting 61
5.6.1 Common Problems
5.6.2 Door Micro Switch
5.6.3 Motor Thermal Breaker
5.6.4 Safety Thermostat Of The Oven Chamber
5.6.5 Technical Problems / Alarm Code
5.7 Scheduled Maintenance Service History 63
5.7.1 Service Log
5.8 Accessories and Consumables 64

Due to continuous product research and development,
the information contained herein is subject to change without notice.

1.1 Your New Giorik Product

Thank you for choosing this quality Giorik product.
All Giorik products are designed and manufactured to meet the needs of food service professionals. By caring for and maintaining this new Giorik product in accordance with these instructions, will provide many years of reliable service.

Stoddart is a wholly Australian owned company, which manufactures and/or distributes a comprehensive range of food service equipment for kitchens, food preparation and presentation. Stoddart products are manufactured and engineered to provide excellent results whilst offering value-for-money, ease-of-use and reliability.

Carefully read this instruction booklet, as it contains important advice for safe installation, operation and maintenance. Keep this booklet on hand in a safe place for future reference by other operators or users.

Disclaimer

The manufacturer/distributor cannot be held responsible or liable for any injuries or damages of any kind that occur to persons, units or others, due to abuse and misuse of this unit in regards to installation, removal, operation, servicing or maintenance, or lack of conformity with the instructions indicated in this documentation.

All units made by the manufacturer/distributor are delivered assembled, where possible, and ready to install. Any installation, removal, servicing, maintenance and access or removal of any parts, panels or safety barriers that is not permitted, does not comply in accordance to this documentation, or not performed by a **TRAINED AND AUTHORISED SPECIALIST** will result in the **IMMEDIATE LOSS OF THE WARRANTY.**

The manufacturer/distributor cannot be held responsible or liable for any unauthorised modifications or repairs. All modifications or repairs must be approved by the manufacturer/distributor in writing before initiating. All modifications or repairs performed to this unit must be performed at all times by a **TRAINED AND AUTHORISED SPECIALIST.**

Stoddart design, manufacture & distribute Food Service Equipment (appliances) exclusively for the commercial market.
This appliance is not designed nor intended for household or domestic use and must not be used for this purpose.

This product is intended for commercial use, and in line with Australian electrical safety standards the following warnings are provided:

- This product is not intended for use by persons (including children) with reduced physical, sensory or mental capabilities, or lack of experience and knowledge, unless they have been given supervision or instruction concerning the use of the product by a person responsible for their safety. Children should be supervised to ensure that they do not play with the product
- If the supply cord is damaged, it must be replaced by the manufacturer, its service agent or similarly qualified persons in order to avoid a hazard

Due to continuous product research and development,
the information contained herein is subject to change without notice.

1.2 Australia and New Zealand Warranty

STODDART®

Warranty & Registration

1.2.1 Warranty Period

All Stoddart manufactured and distributed products are covered by Stoddart's standard Australia and New Zealand Product Warranty (minimum 12 month on-site parts and labour, terms and conditions apply). Further to this standard warranty, certain products have access to an extended warranty. Full terms, conditions and exclusions can be found using the below Link/QR code.

1.2.2 Warranty Registration

To register your new product, Follow the below Link/QR code.

Australia
CLICK HERE

New Zealand
CLICK HERE

Due to continuous product research and development, the information contained herein is subject to change without notice.

1.3 General Precautions

When using any electrical unit, safety precautions must always be observed.

- All units **MUST** be installed according to the procedures stated in the installation section of this manual
- In the case of new personnel, training is to be provided before operating the equipment
- **DO NOT** use this unit for any other purpose than its intended use
- **DO NOT** store explosive substances such as aerosol cans with a flammable propellant in or near this unit
- Keep fingers out of “pinch point” areas
- Unit is not waterproof **DO NOT** use jet sprays, hoses or pour water over/on the exterior of the unit
- Only use this unit with voltage specified on the rating label
- **DO NOT** remove any cover panels that may be on the unit
- **DO NOT** use sharp objects to activate controls
- If any fault is detected, refer to troubleshooting
- The manufacturer declines any liability for damages to persons and/or things due to an improper/wrong and/or unreasonable use of the machine
- Only specifically trained/qualified Technicians (Stoddart, one of our service agents, or a similarly qualified persons) should carry out any and all repairs, maintenance and services

1.3.1 General Warnings

- DO NOT USE OR STORE FLAMMABLE MATERIALS IN OR NEAR THIS APPLIANCE
- DO NOT SPRAY AEROSOLS IN THE VICINITY OF THIS APPLIANCE WHILE IT IS IN OPERATION
- DO NOT MODIFY THIS APPLIANCE
- DO NOT PLACE ARTICLES ON OR AGAINST THIS APPLIANCE

The equipment complies with the essential requirements of the Low Voltage Directive 2006/95/EC and Electromagnetic Compatibility Directive 2004/108/EC
It meets the provisions of the following electrical, Watermark and Gas standards:

- AS/NZS 60335.1
- AS/NZS 60335.2.42
- AS/NZS 4563, AS/NZS 5601
- AS/NZS 1869
- WMTS-101

Due to continuous product research and development,
the information contained herein is subject to change without notice.

2.1 Setting Up Information

	**IMPORTANT** **To be installed only by an authorised service technician**

	**WARNING** **Improper installation, adjustments, alterations, service or maintenance can cause property damage, injury or death**

2.1.1 Handling

- Use suitable means to move the unit;
  - For smaller items use two people
  - For large items a fork lift, pallet trolley or similar (the forks should reach completely beneath the pallet)

2.1.2 Unpacking

- Check the unit for damage before and after unpacking. If unit is damaged, contact the distributor and manufacturer
- Should any item have physical damage, report the details to the freight company and to the agent responsible for the dispatch within seven (7) days of receipt. No claims will be accepted or processed after this period
- Remove all protective plastic film, ties and packers before installing and operating
- Clean off any remaining residue from the interior/exterior of the unit using a clean cloth dampened with warm soapy water

2.1.3 Disposal

- At the end of the appliance's working life, make sure it is scrapped & components recycled properly
- Current environmental protection laws in the state/country of use must be observed
- Doors must be removed before disposal
- Power supply cable must be removed before disposal
- For further information on the recycling of this product, contact the local dealer/agent or the local body responsible for waste disposal

2.1.5 Stacked Installation

	**IMPORTANT** **For stacked oven installations, this manual is to be used in conjunction with the stacking installation manual (supplied with stacking kit)**

Due to continuous product research and development, the information contained herein is subject to change without notice.

2.2.Positioning

IMPORTANT

DO NOT install unit under a bench.
Under Bench installation will void warranty

2.2.1 General Information

- The oven must be installed under an extraction canopy that meets AS 1668.2.
- Have a smooth, level floor which can bear the weight of the appliance at full load
- Have a room temperature above +4°C with a maximum humidity of 70%;
- Comply with the regulations in force in terms of safety in the workplace and the systems;
- Not contain potentially explosive materials or substances;
- Be dedicated to food preparation. In addition, a gas-fired appliance requires, by law, rooms with a surface area and ventilation that are suitable for the power of the oven and that have a means of externally evacuating flue gases
- Please consult national and local standards to ensure that your unit is positioned and ventilated in accordance with any existing requirements
- Do not allow cables or other items to rest/hang over the exhaust vents
- Do not install unit under a bench
- No equipment is to be installed/placed on the Service compartment (top of oven) excluding stacked applications using a Stoddart stacking kit and/or Stoddart Recirculating Hood. The service compartment must be easily accessible. Failure to adhere may add service costs due to lack of access.

2.2.2 Spacing

The sides of the Combi oven must have the following minimum clearances:

Heat Source
500mm clearance from another heat source, in order to protect the oven components.
For distances under 500mm, it is mandatory for Stoddart heat shields to be fitted (for a minimum distance of 50mm from the surface of the oven). Failure to adhere to minimum clearances may void the oven warranty.

Non-Heat Source
50mm clearance from a non-heat source to the surface of the oven. Failure to adhere to minimum clearances may void the oven warranty.

Heat Source

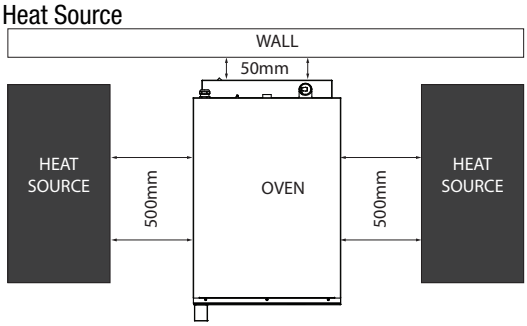

Heat Source With Heat Shield

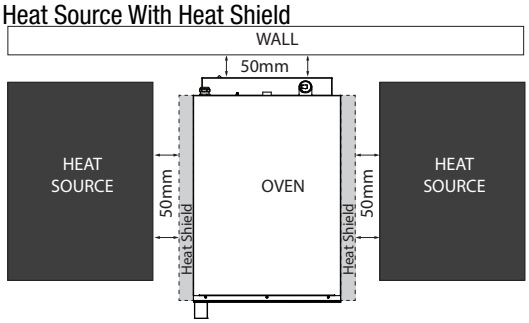

Non - Heat Source

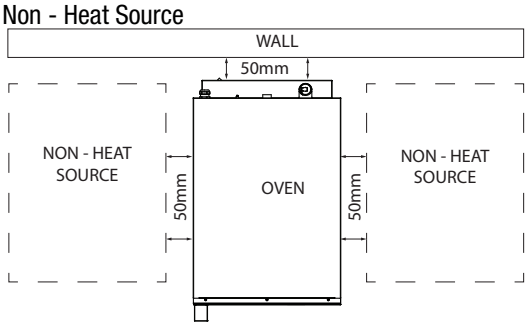

Due to continuous product research and development,
the information contained herein is subject to change without notice.

2.2.3 Levelling

Using a spirit level, ensure that the Combi oven is level. Adjust the foot height to level Combi oven
If using a stand, level the stand by adjusting the feet, then level the Combi oven

IMPORTANT

DO NOT STORE ANY ITEMS BETWEEN THE OVEN AND STAND
THE AIR INTAKE IS LOCATED AT THE BASE OF THE OVEN
DO NOT BLOCK AIR INTAKE

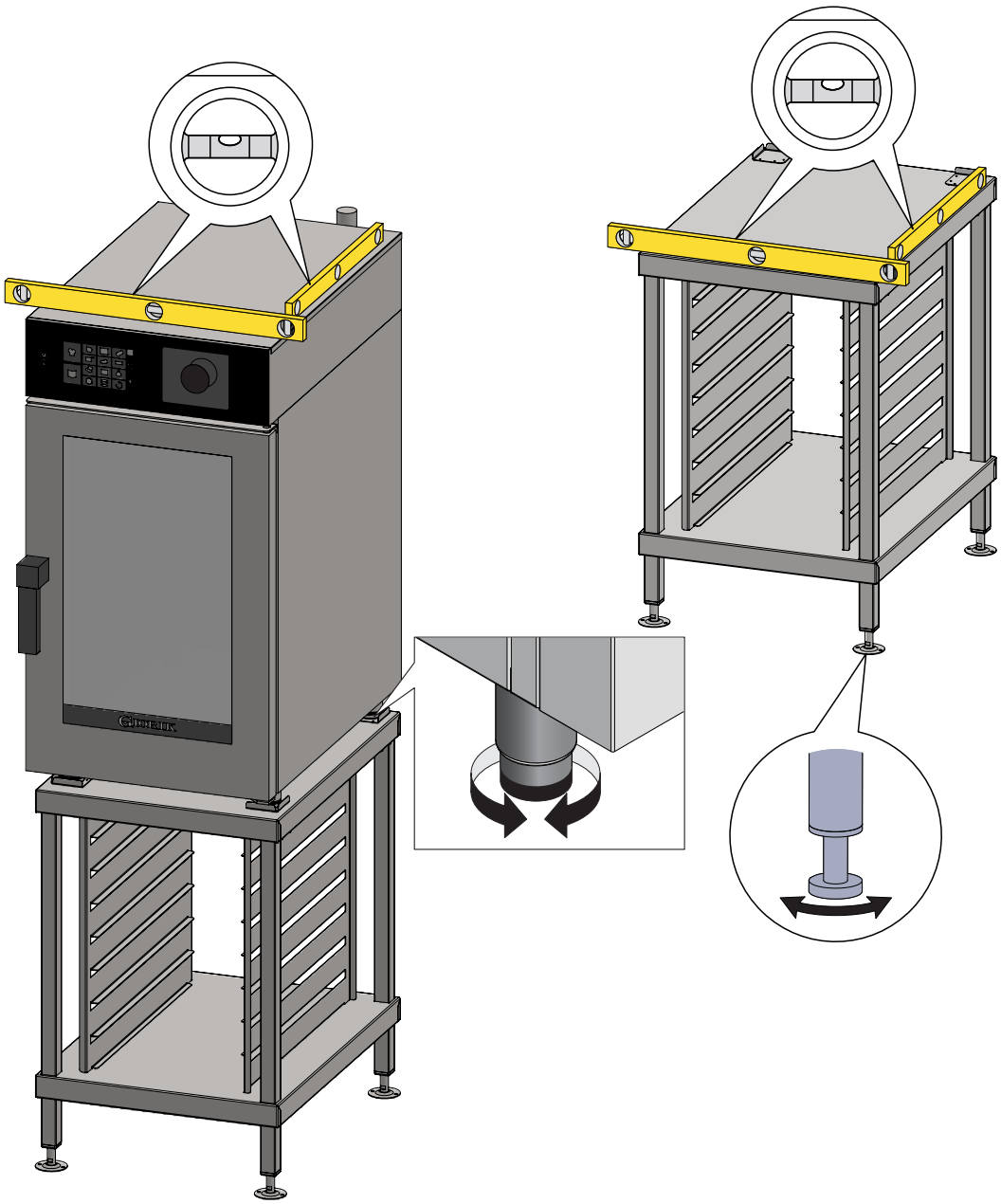

2.3 Machine identification

2.3.1 Rating Plate - Check Before Installation

Identification is displayed on the Rating/Data plate affixed to the side of the machine.

Do not remove the Rating/Data plate or make it illegible.
Do not remove the Rating/Data plate's transparent protection.

Electric Oven Rating Plate example:

GIORIK	Imported by: STODDART www.stoddart.com.au
Serial No: **010241/11/25** Model No: **SNHE101WT** Description: Giorik; Steambox; COMBI OVEN ELECTRIC WITH BOILER 10 GN1/1	
Voltage: 415V 3N 50 Hz **Total kW: 18,2**	WaterMark AS WMTS-101 Lic: WM-022773
This product incorporates backflow prevention complying with WMTS-101, Clause 8.2(d)	

Gas Oven Rating Plate example:

GIORIK	Imported by: STODDART www.stoddart.com.au	
Serial No: **010241/11/25** Model No: **SNHG061WT** Description: Giorik; Steambox; COMBI OVEN GAS WITH BOILER 6 GN1/1		
Gas Approval No. Certified Gas Safety - AS 4563 Global-Mark.com.au® ID: GAS-105480-003	Gas Injector 5.0mm for Natural Gas 3.8mm for Universal LPG Test Point Pressure 1.00 kPa Natural Gas 2.70 kPa Universal LPG	Factory set gas type ☐ Natural Gas ☐ Universal LPG Total gas consumption: **43.2 MJ/h**
Voltage: 230V 1N 50 Hz **Total kW: 1,4**	WaterMark AS WMTS-101 Lic: WM-022773	
This product incorporates backflow prevention complying with WMTS-101, Clause 8.2(d)		

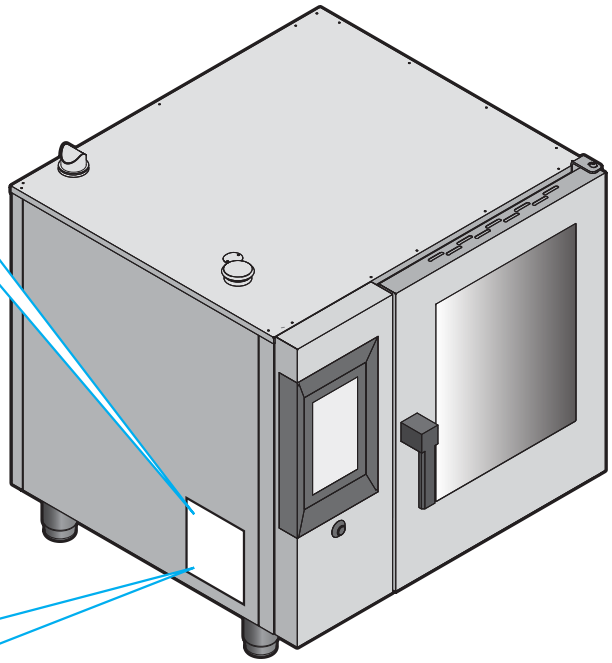

Note: Gas installation, confirm that this unit has been tested and approved for the type of gas used at the installation location.

Due to continuous product research and development,
the information contained herein is subject to change without notice.

2.4 Electrical Connection

2.4.1 Information



WARNING

This unit must be installed in accordance with local electrical regulations/requirements. Some procedures in this manual require the power to the equipment to be turned off and isolated. Turn the power OFF at the power point and unplug the power supply lead by the plug body. If the power point is not readily accessible turn the equipment off at the isolation switch or the circuit breaker in the switchboard. Attach a yellow "CAUTION-DO NOT OPERATE" tag. This must be performed where relevant unless the procedures specify otherwise. FAILURE TO DO SO MAY RESULT IN ELECTRIC SHOCK.

Single Phase GAS Units:

- Supplied and fitted with an appropriately rated plug and lead

Three Phase Units:

- A terminal block for on-site connection, by a licensed electrician located inside the service compartment of the unit, indicated as:
  - 3Ø + N + E

Notes:

- If the supply cord is damaged, it must be replaced by the manufacturer, its service agent or similarly qualified persons in order to avoid a hazard. Please contact Stoddart for parts and we will advise how to do this in order to avoid any electrical hazard
- The power cable should be dry and/or isolated from moisture or water

Due to continuous product research and development, the information contained herein is subject to change without notice.

2.4.2 Wiring (KB061WT / KB101WT)

1. Remove service compartment cover
2. Connect electrical wiring, following the below wiring diagram.
   After connecting wires, use a multimeter to check active, Neutral & Earth connections
3. Reinstall service compartment cover
4. Secure wiring cable by fastening the cable gland nut

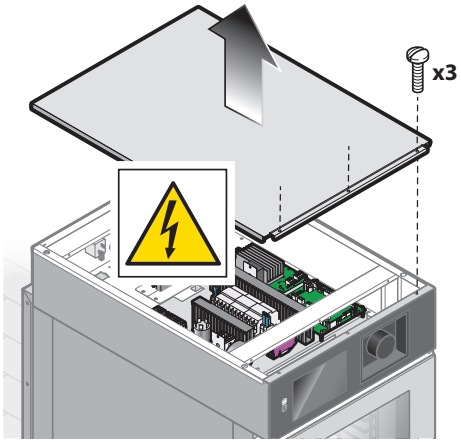

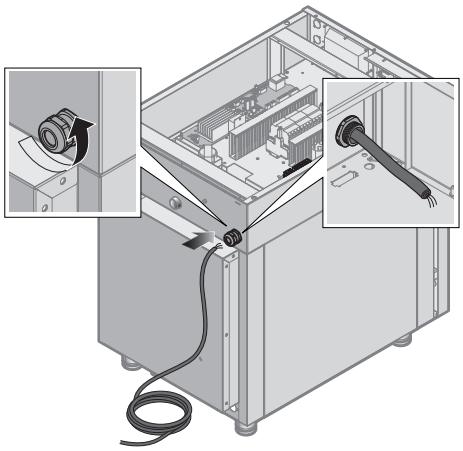

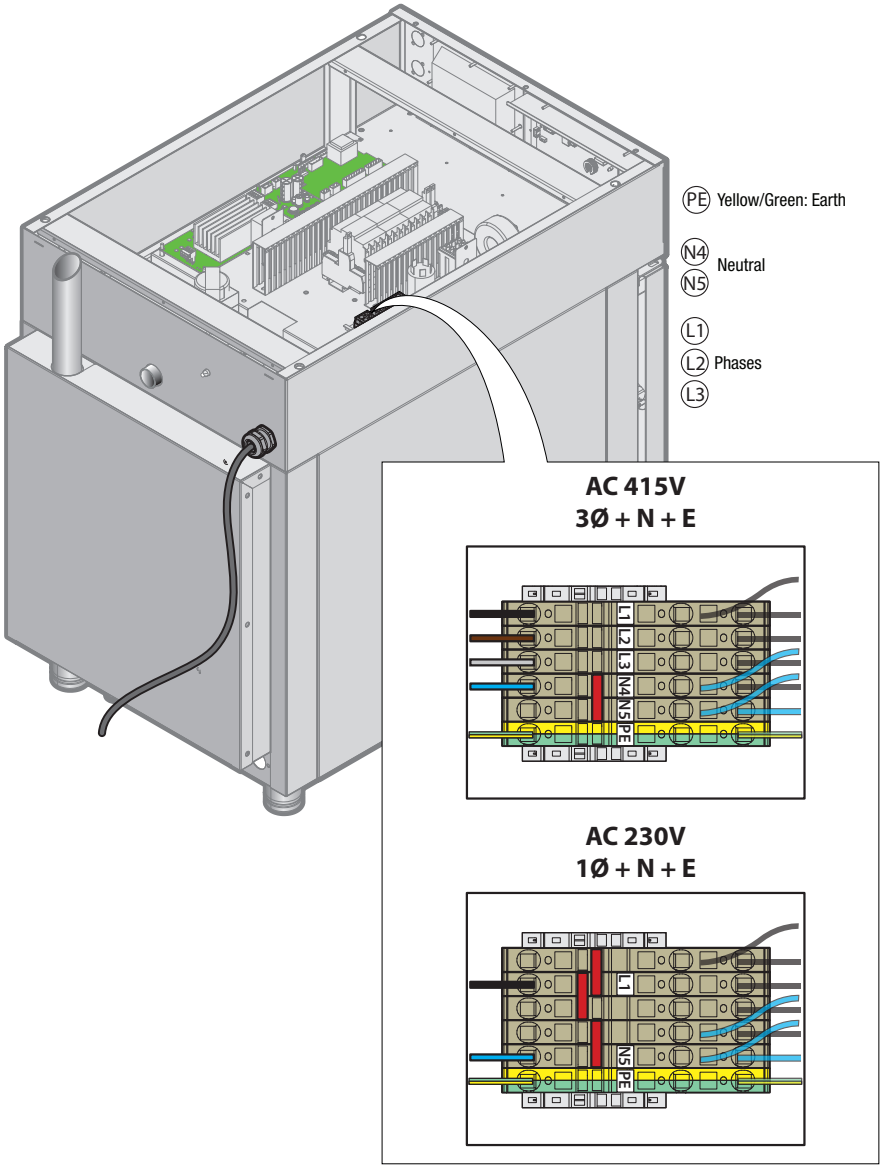

Due to continuous product research and development,
the information contained herein is subject to change without notice.

2.5 Gas Connection (Gas Models Only)



WARNING

This unit must be installed by an authorised person in accordance with this instruction manual, AS/NZS 5601 – Gas installations (installation and pipe sizing), local gas fitting regulations, local electrical regulations, local water regulations, local health regulations, Building Code of Australia and any other government authority.

2.5.1 Connecting the gas

Must use restraining cable if oven is installed with flexible gas hose connection and Hose assemblies for use with cooking appliances shall be certified as conforming to AS/NZS 1869 and be Class B or Class D. Quick connect devices if provided, shall be certified to AG 212 (to be AS 4627).

The oven is calibrated originally for operation with the type of gas specified on placing the order. The type of gas for which the oven is adjusted is given on the technical Installation prescriptions. The oven installation and commissioning operations must be performed by qualified staff only in compliance with rules and regulations in force. The gas, electrical connections and the installation location of the oven must be in compliance with the regulations and the standards in force.

Model Number	Main Burner	Gas Type	Gas Orifice (mm)	Aeration (mm)	Test Point Pressure (kPa)	Total NGC (MJ/h)	Air/Gas Ratio Adjustment (Turn Clockwise to fully close)
KBG061WT	1	Natural Gas	3.3	12.2	1.0	20.0	5 turns (From Closed)
KBG101WT	1		3.4	12.2		40.0	5 turns (From Closed)
KBG061WT	1	Universal LPG	2.7	12.2	2.70	20.0	3 turns (From Closed)
KBG101WT	1		2.8	12.2		40.0	4 turns (From Closed)

Note that the air necessary for combustion of the burners is 2 m³/h per kW of power installed. This appliance is suitable for connection with rigid pipe or flexible hose. The isolating manual shut-off valve connection point must be accessible when the appliance is installed.

Natural Gas: the supplied regulator must be fitted to the appliance inlet connection. Gas pressure must be adjusted to 1.00 kPa when the burner is operating at high flame, the appliance test point is located on the regulator.
Universal LPG: the supplied regulator must be fitted to the appliance inlet connection. Gas pressure must be adjusted to 2.70 kPa when the burner is operating at high flame, the appliance test point is located on the regulator.

2.5.3 On-site Commissioning Adjustment

- Ensure the regulator supplied is fitted and the correct inlet gas pressure is adjusted
- From the specification table listed on the previous page please adjust the RQ screw the nominated turns from closed
- Once the unit has been installed and all installation instructions followed please turn the unit on
  - Ensure the cavity is empty of all packaging items

Adjust RQ screw as indicated in the table (Page 9)



Gas Test Procedure:

A. Press “Settings”
B. Press “Service”
C. Press “Advanced Services”
D. Type the password 156 then press Enter to confirm
E. Press “Gas Test”
F. The gas test must be carried out with the door open
G. Phase 1 - Burner Off. Press “Forward” to begin the gas test procedure
H. Phase 2 - Burner ignition
I. Phase 3 - Minimum / Maximum power. Press “Back/Forward” to toggle between Minimum / Maximum. Pressing forward when in the Maximum will end the procedure

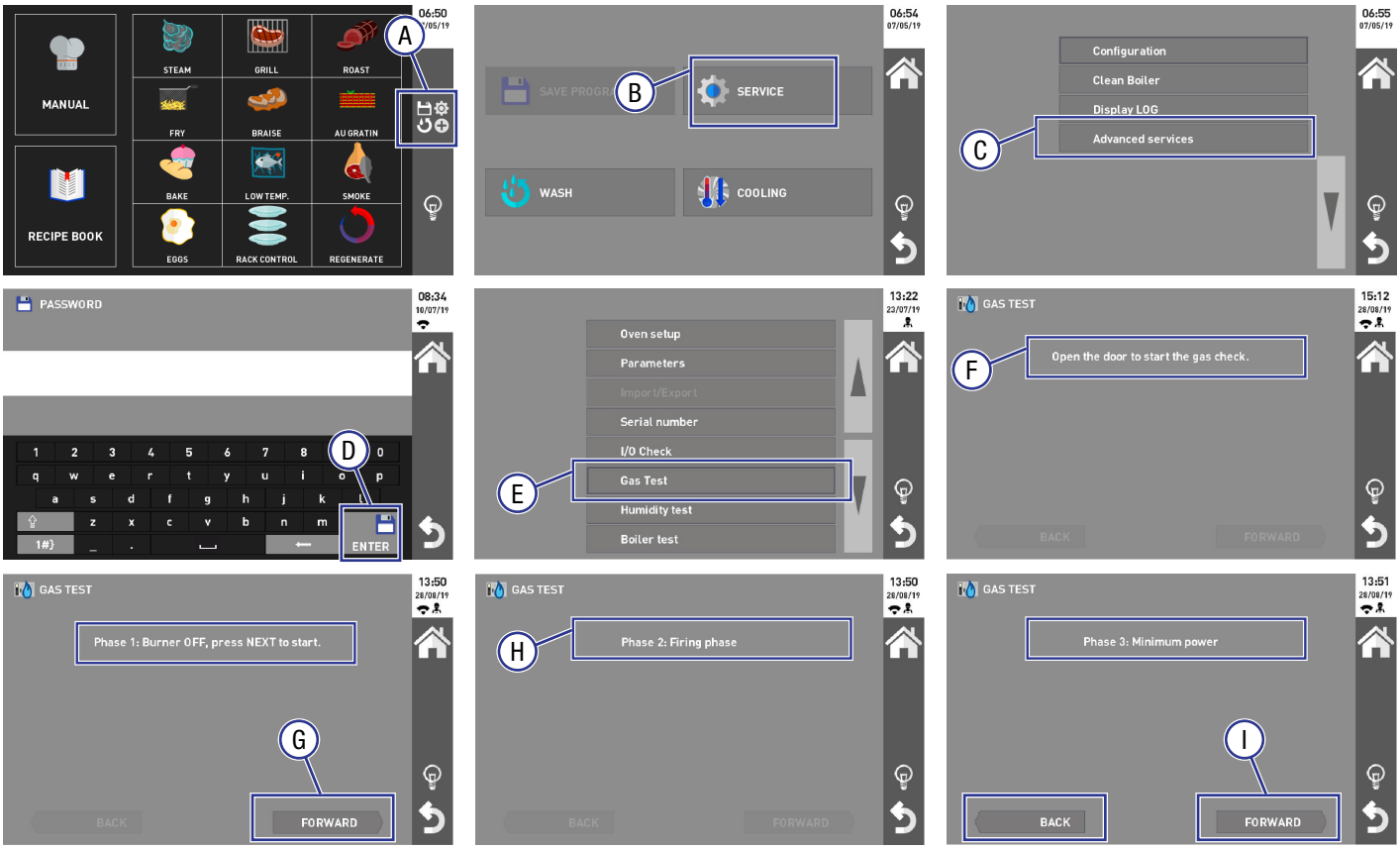

- Testing is completed once the burner is operating continuously without any flame failures
  - Flame failure is likely due to air still being in the gas supply line

For connection using a flexible hose assembly, the flexible hose assembly must be certified to AS/NZS 1869 class B or D, be of appropriate internal diameter for the total gas consumption, be kept as short as possible (not exceeding 1200mm), must not be in contact with the floor or any hot or sharp surfaces. The hose assembly must not be subject to strain, abrasion, kinking or deformation.
A restraining device must be fitted to restrict the appliance movement to no more than 80% of the gas hose length.

Annual service by an authorised person is recommended, or if any of the following conditions are noticed; incomplete ignition, appreciable yellow tipping, carbon deposition, lifting, floating, lighting back or objectionable odour.

Due to continuous product research and development,
the information contained herein is subject to change without notice.

2.5.4 Gas Conversion

- Please ensure the unit is the correct gas type for the supplied gas. Gas type is nominated on the appliances rating plate
- Should the appliance require converting to an alternative gas type please contact Stoddart as this must be carried out by an Authorised Service Technician

2.5.5 Ventilation/Extraction

In compliance with the installation regulations, the ovens must be used in premises suitable for the evacuation of combustion products.
The oven must be installed under an extraction canopy that meets AS 1668.2. and in accordance with all local council regulations.
When the appliance is installed under the extraction hood, check that the following indications are respected:

- The volume extracted must be higher than that of the flue gases generated (see current regulation)
- The material with which the hood filter is made must resist the temperature of the flue gases which, on exiting the appliance, can reach 300°C
- The end part of the appliance flue pipe must be positioned inside the base perimeter projection of the hood

2.6 Water Connection

IMPORTANT

Selection of the correct water filtration system to suit local water conditions is CRITICAL. Failure to install the correct system according to the following guidelines will void warranty.

2.6.1 Chloride Test

1. Remove Titrator from bottle and replace bottle cap immediately
2. Insert lower end of the Titrator into water to be tested (approx 20mm of water). DO NOT allow water to touch yellow completion band at top of Titrator
3. Allow water to completely saturate the wick of Titrator. Reaction is complete when yellow band turns dark
4. Note where the white chloride peak falls on the scale. This represents the unit value
5. Refer to the table to convert the Titrator units into salt concentration

   * Readings greater than 1.4 (32PPM) require a Reverse Osmosis Unit to be installed

   * Readings less than 1.4 (32PPM) require the Total dissolved solids (TDS) be tested

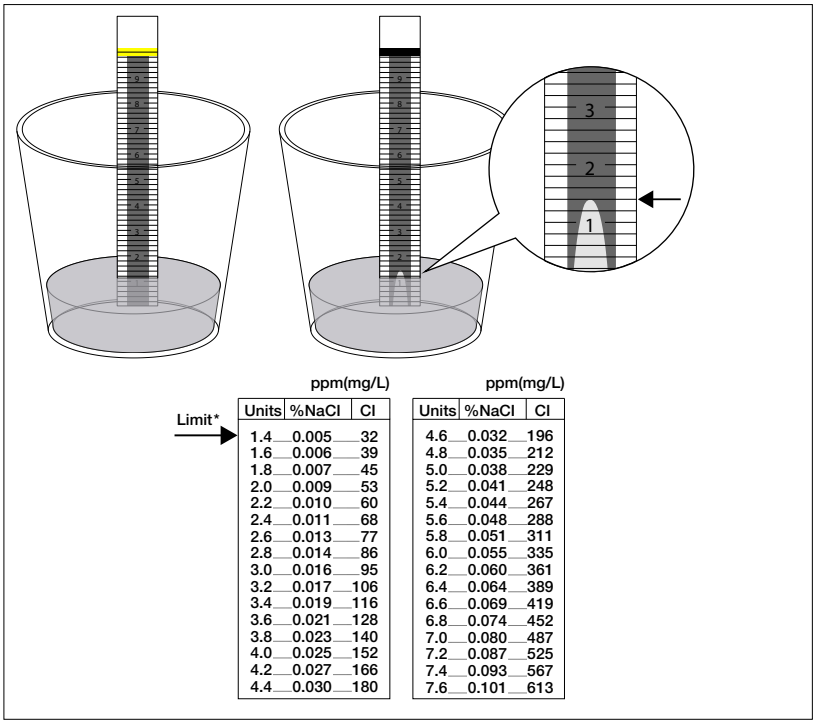

Limit*

Units	%NaCl	ppm(mg/L) Cl
1.4	0.005	32
1.6	0.006	39
1.8	0.007	45
2.0	0.009	53
2.2	0.010	60
2.4	0.011	68
2.6	0.013	77
2.8	0.014	86
3.0	0.016	95
3.2	0.017	106
3.4	0.019	116
3.6	0.021	128
3.8	0.023	140
4.0	0.025	152
4.2	0.027	166
4.4	0.030	180

Units	%NaCl	ppm(mg/L) Cl
4.6	0.032	196
4.8	0.035	212
5.0	0.038	229
5.2	0.041	248
5.4	0.044	267
5.6	0.048	288
5.8	0.051	311
6.0	0.055	335
6.2	0.060	361
6.4	0.064	389
6.6	0.069	419
6.8	0.074	452
7.0	0.080	487
7.2	0.087	525
7.4	0.093	567
7.6	0.101	613

2.6.2 Total Dissolved Solids (TDS) Test

1. Remove the cover from the TDS meter, turn on by pressing the On/Off button. The display should read 000
2. Insert lower end of the TDS meter into water to be tested (approx 20mm of water). DO NOT completely submerge
3. Wait 5-10 seconds
4. The number displayed on meter is the TDS (Total Dissolved Solids) of the water expressed in PPM (parts per million) e.g. TDS = 70PPM

   • Contact Stoddart if reading is lower than 20ppm

5. When finished, turn the TDS meter off

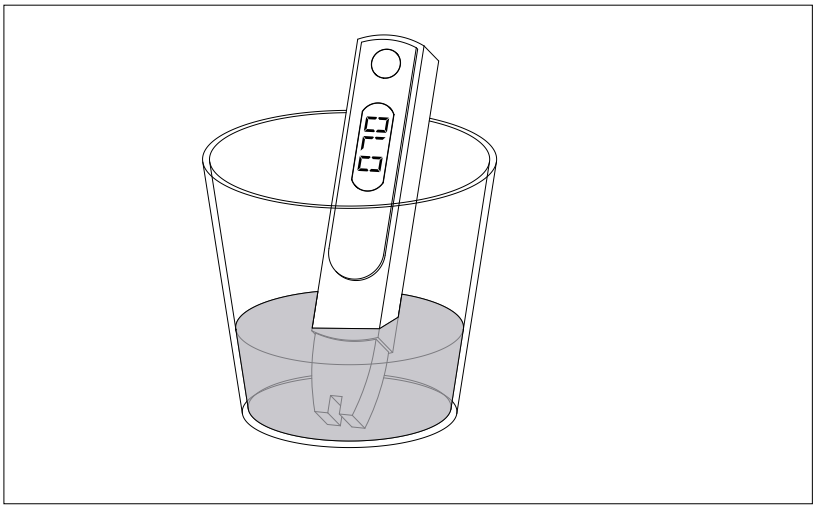

Due to continuous product research and development,
the information contained herein is subject to change without notice.

2.6.3 Filtration System

- After testing the water supply quality, use the below chart to determine the water filter requirements
- Only Stoddart supplied filter systems can be used

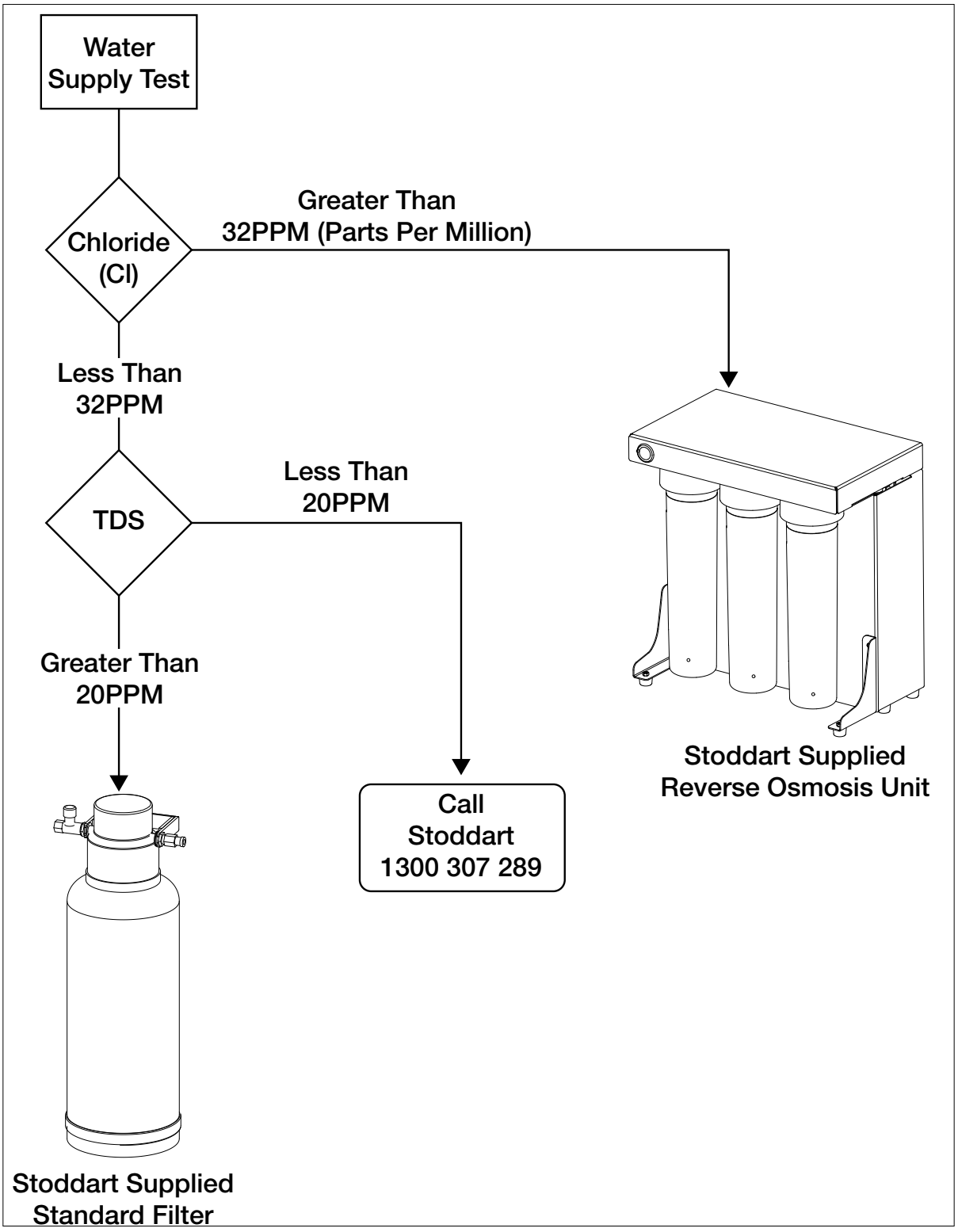

2.6.4 Reverse Osmosis Single Oven

IMPORTANT

This oven must be installed in accordance with the Plumbing Code of Australia (PCA)
The Oven must be installed with the supplied Dual Check Valve, Water Filter and Pressure Limiting Valves

Water Connection	3/4" BSP
Water Inlet Pressure	150 - 350KPA If the incoming water pressure is below the specified minimum (150 kPa), install a pump (minimum flow rate: 350 l/h); if it is above the specified maximum (350 kPa), install a pressure limiting valve
Tempered water supply	10°C - 30°C
Water Hardness (CaCO3)	3°f - 9°f (30 - 90ppm; 1.5-5°d)
PH	7.0 - 8.5
TDS	40 - 150mg/L
Langelier index	> 0.5

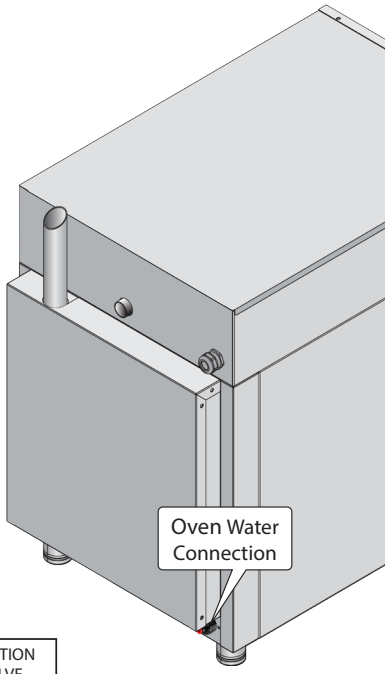

Item	Description	Supplied with Oven	Supplied with RO Kit	Total Qty.
A	Pressure Limiting / Dual Check Valve 500 Kpa	---	1	**1**
B	3/4" BSP Male to 3/4 BSP Female brass fitting	1	---	**1**
C	3/4" Bsp To 3/8" Tube Connector	---	3	**3**
D	3/8 Tube 'Water' (to be cut to length)	3m	3m	**6m**
E	1/4 Tube 'Drain' (to be cut to length)	---	2m	**1**
F	3/8" Three Way Manifold	2	2	**4**
G	3/8" Three Way Manifold (For filter flushing)	---	1	**2**
H	Locking Clip	12	12	**24**
I	Reverse Osmosis (RO) System	---	1	**1**
J	Ball Valve - Water Storage Tank		1	**1**
K	Water Storage Tank	1	---	**1**

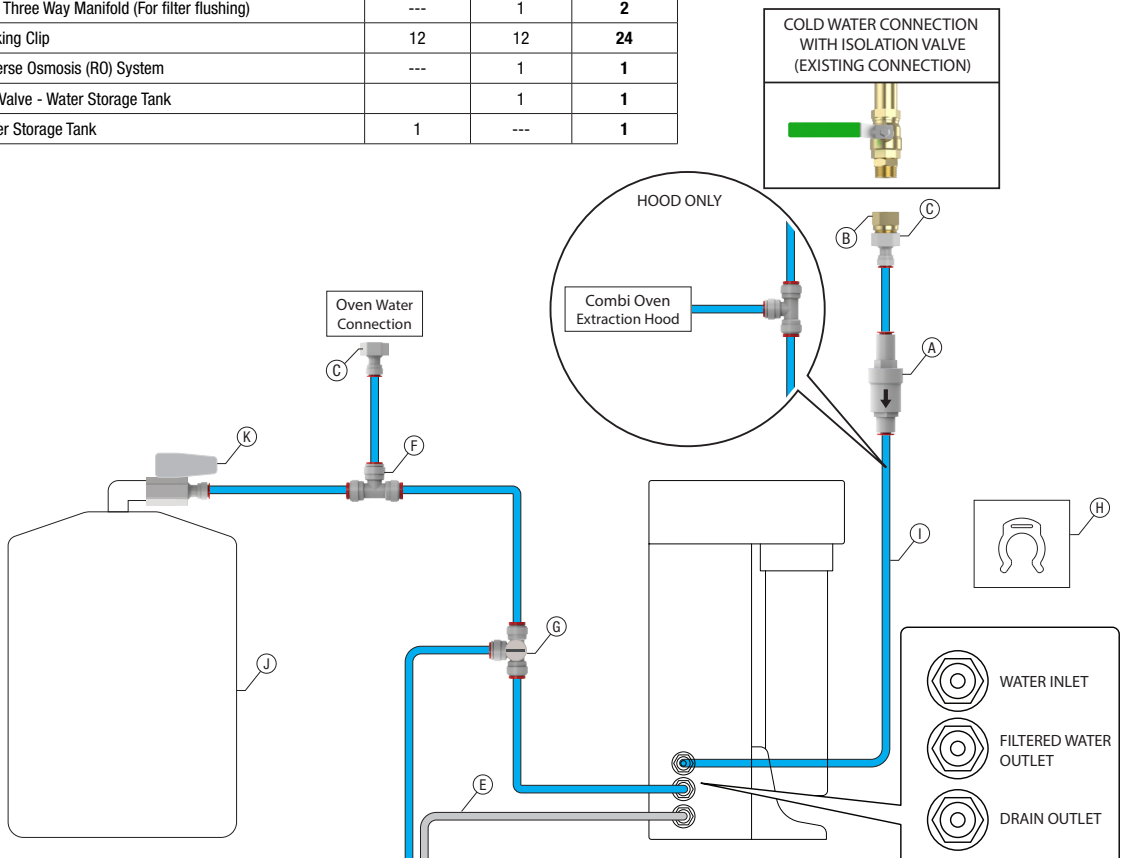

Due to continuous product research and development,
the information contained herein is subject to change without notice.

2.6.5 Reverse Osmosis Stacked Oven

IMPORTANT

This oven must be installed in accordance with the Plumbing Code of Australia (PCA)
The Oven must be installed with the supplied Dual Check Valve, Water Filter and Pressure Limiting Valves

Water Connection	3/4" BSP
Water Inlet Pressure	150 - 350KPA If the incoming water pressure is below the specified minimum (150 kPa), install a pump (minimum flow rate: 350 l/h); if it is above the specified maximum (350 kPa), install a pressure limiting valve
Tempered water supply	10°C - 30°C
Water Hardness (CaCO3)	3°f - 9°f (30 - 90ppm; 1.5-5°d)
PH	7.0 - 8.5
TDS	40 - 150mg/L
Langelier index	> 0.5

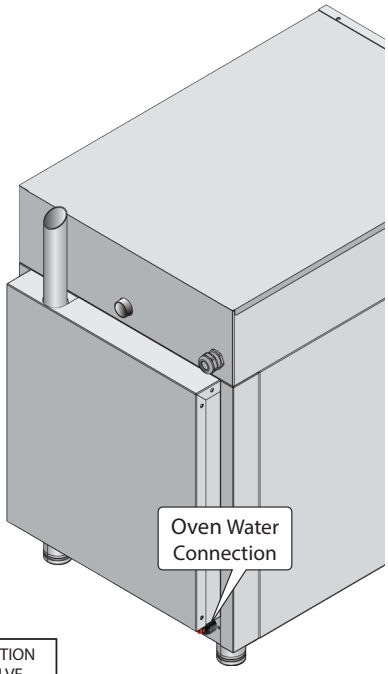

Item	Description	Supplied with Oven	Supplied with RO Kit	Total Qty.
A	Pressure Limiting / Dual Check Valve 500 Kpa	---	1	**1**
B	3/4" BSP Male to 3/4 BSP Female brass fitting	1	---	**1**
C	3/4" Bsp To 3/8" Tube Connector	---	3	**3**
D	3/8 Tube 'Water' (to be cut to length)	3m	3m	**6m**
E	1/4 Tube 'Drain' (to be cut to length)	---	2m	**1**
F	3/8" Three Way Manifold	2	2	**4**
G	3/8" Three Way Manifold (For filter flushing)	---	1	**2**
H	Locking Clip	12	12	**24**
I	Reverse Osmosis (RO) System	---	1	**1**
J	Water Storage Tank	1	---	**1**
K	Ball Valve - Water Storage Tank		1	**1**

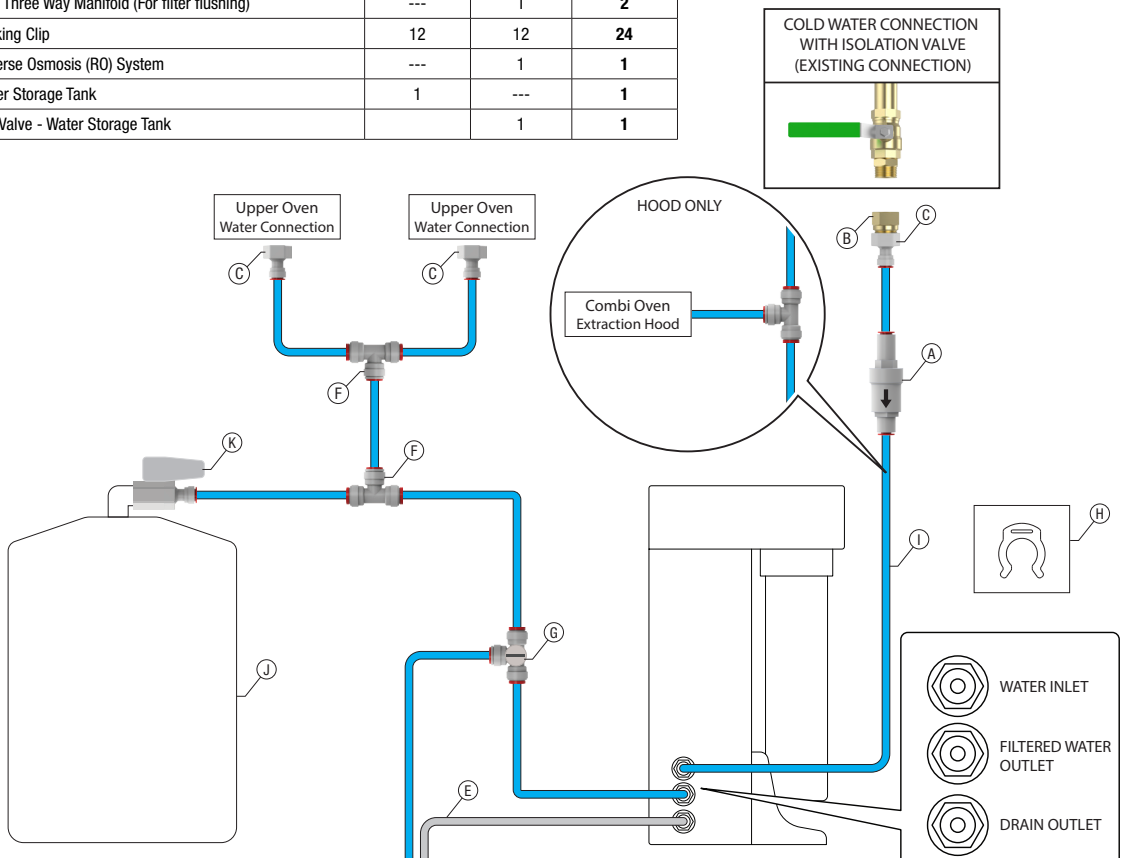

2.6.6 Standard Filter - Single Oven

IMPORTANT

This oven must be installed in accordance with the Plumbing Code of Australia (PCA)
The Oven must be installed with the supplied Dual Check Valve, Water Filter and Pressure Limiting Valves

Water Connection	3/4" BSP
Water Inlet Pressure	150 - 350KPA If the incoming water pressure is below the specified minimum (150 kPa), install a pump (minimum flow rate: 350 l/h); if it is above the specified maximum (350 kPa), install a pressure limiting valve
Tempered water supply	10°C - 30°C
Water Hardness (CaCO3)	3°f - 9°f (30 - 90ppm; 1.5-5°d)
PH	7.0 - 8.5
TDS	40 - 150mg/L
Langelier index	> 0.5

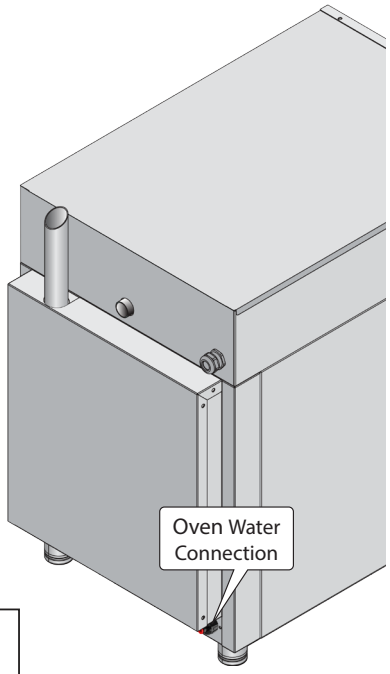

Item	Description	Supplied with Oven	Supplied with SF Kit	Total Qty.
A	Pressure Limiting / Dual Check Valve 350 Kpa	---	1	**1**
B	3/4" BSP Male to 3/4 BSP Female brass fitting	1	---	**1**
C	3/4" Bsp To 3/8" Tube Connector	1	3	**4**
D	3/8" Quick connect adapter	---	2	**2**
E	3/8 Tube (Water) (to be cut to length)	3m	2m	**5m**
F	Locking Clip	12	12	**24**
G	3/8" Three Way Manifold	2	---	
H	Flush Valve	---	1	
I	Standard Filter System	---	1	**1**

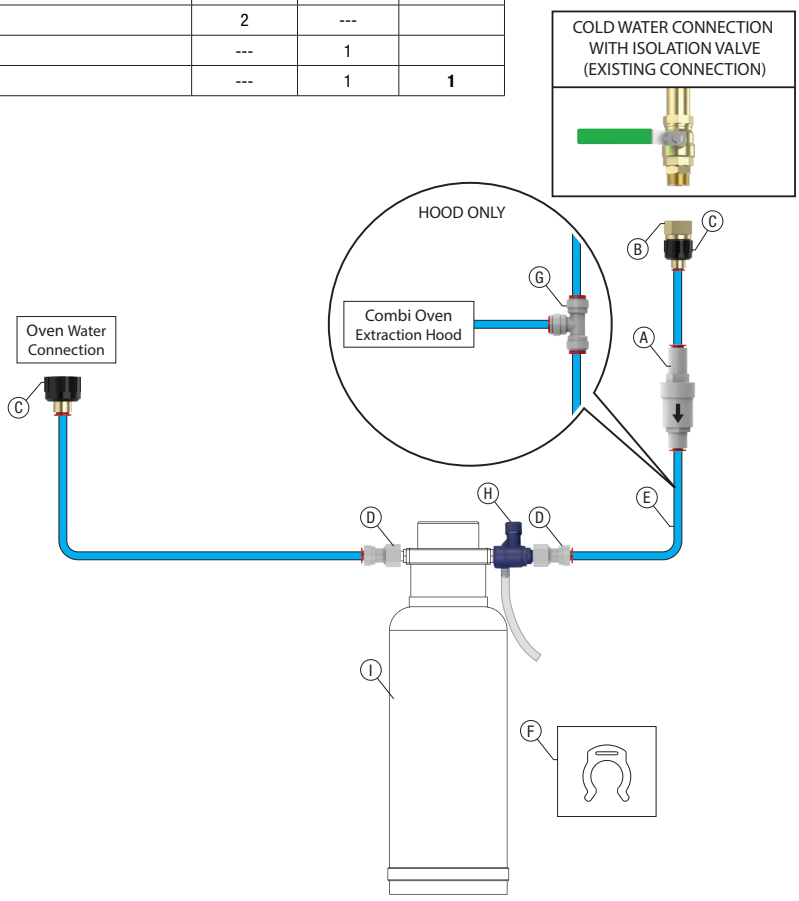

Due to continuous product research and development,
the information contained herein is subject to change without notice.

2.6.7 Standard Filter - Stacked Oven

IMPORTANT

This oven must be installed in accordance with the Plumbing Code of Australia (PCA)
The Oven must be installed with the supplied Dual Check Valve, Water Filter and Pressure Limiting Valves

Water Connection	3/4" BSP
Water Inlet Pressure	150 - 350KPA If the incoming water pressure is below the specified minimum (150 kPa), install a pump (minimum flow rate: 350 l/h); if it is above the specified maximum (350 kPa), install a pressure limiting valve
Tempered water supply	10°C - 30°C
Water Hardness (CaCO3)	3°f - 9°f (30 - 90ppm; 1.5-5°d)
PH	7.0 - 8.5
TDS	40 - 150mg/L
Langelier index	> 0.5

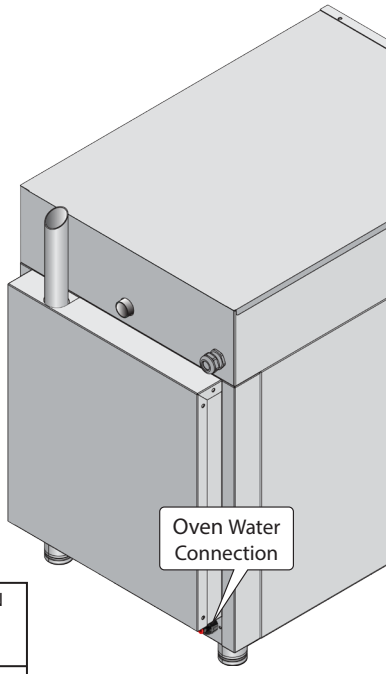

Item	Description	Supplied with Oven	Supplied with SF Kit	Total Qty.
A	Pressure Limiting / Dual Check Valve 350 Kpa	---	1	**1**
B	3/4" BSP Male to 3/4 BSP Female brass fitting	1	---	**1**
C	3/4" Bsp To 3/8" Tube Connector	1	3	**4**
D	3/8" Quick connect adapter	---	2	**2**
E	3/8 Tube (Water) (to be cut to length)	3m	2m	**5m**
F	Locking Clip	12	12	**24**
G	3/8" Three Way Manifold	2	---	
H	Flush Valve	---	1	
I	Standard Filter System	---	1	**1**

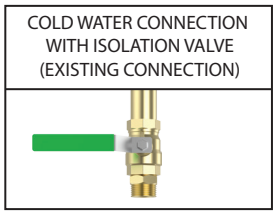

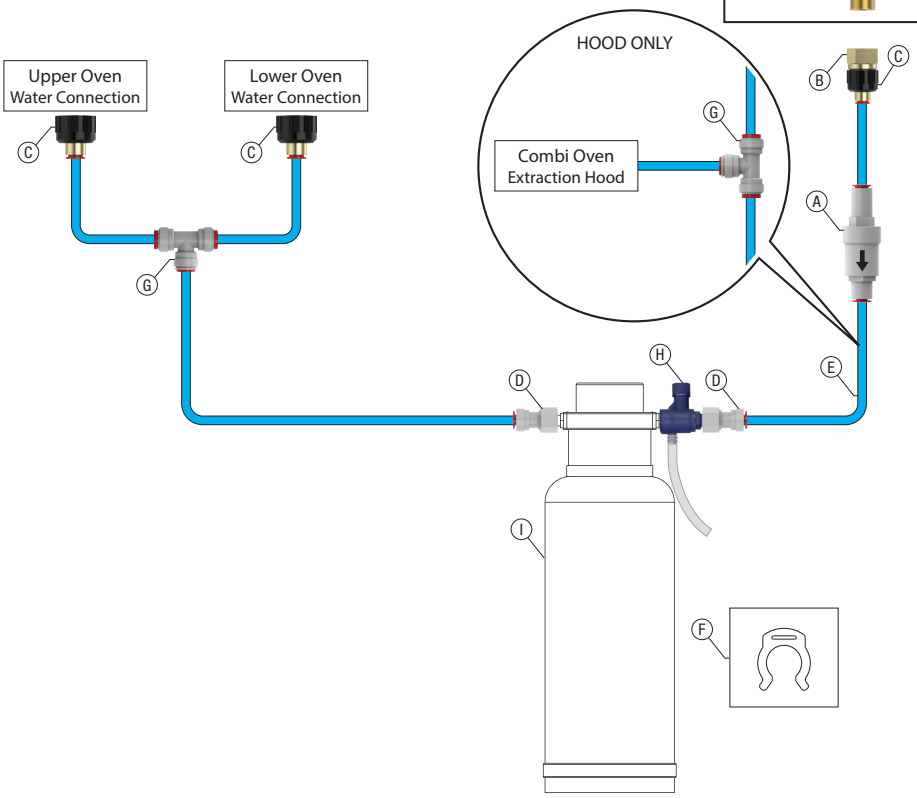

Due to continuous product research and development, the information contained herein is subject to change without notice.

2.7 Drainage Connection

- 40mm Ø drain kit is supplied with oven as illustrated. Any modification or extension to the kit must be able to resist temperatures up to 100°C
- Drain pipes must be directed to the tundish (Drain Kit Supplied). Drain pipe must sit 25mm above the tundish
- Secure drain pipe to the Combi oven outlet located on the back bottom left of the unit

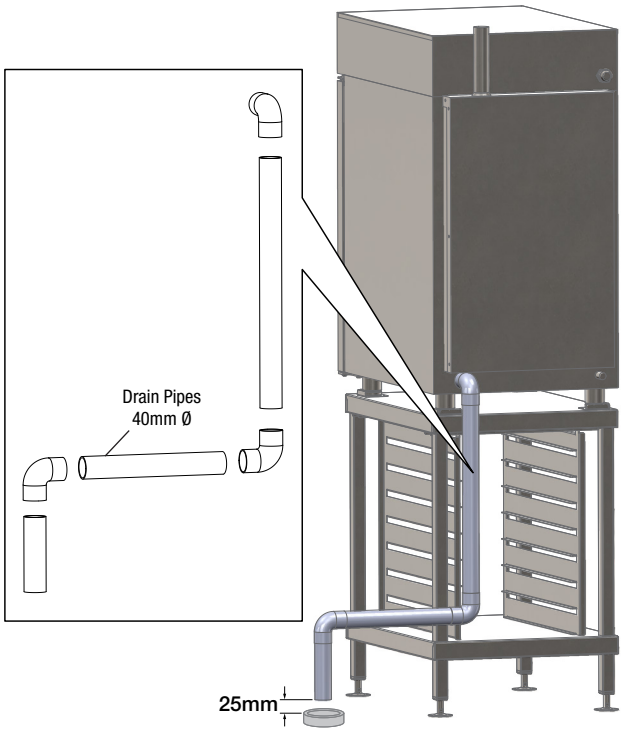

2.8 Liquid Detergent / Rinse Agent Connection

IMPORTANT

Stoddart's preferred detergent method is Tablets.
Only Stoddart provided oven cleaners should be used.
Other products may lead to voidance of warranty!

Detergent and Rinse Agent lines are located on the underside of the oven. When facing the oven:

Detergent Line - Left hand side
Rinse Aid Line - Right hand side

- When tablets are to be used, roll the detergent line up and use zip-ties to secure
- If using the optional Stoddart bottle holder, place the holder on the outside of the grid rack
- Remove the bottle caps from both descaler and detergent
- Drill a 8mm hole in the centre of each cap
- Feed the detergent line and the rinse aid hose through the bottle caps
- Attach the weights to each line
- Place both lines and weight back into the bottles and secure bottle caps (ensure to place correct line in the correct chemical

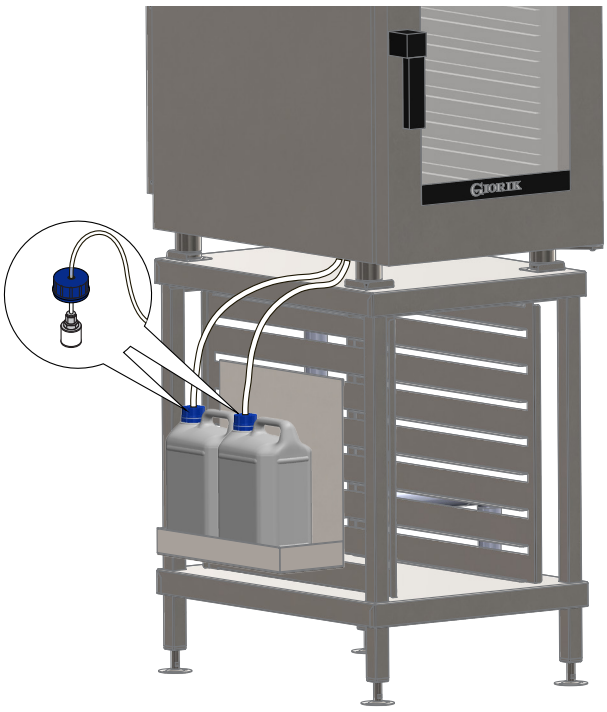

Note: The Stoddart supplied rinse agent is also used as the descaler

Note: The Stoddart supplied rinse agent or vinegar can be used. Vinegar will not aid the cleaning process as well as the rinse agent.

Due to continuous product research and development,
the information contained herein is subject to change without notice.

2.9 Optional Hand Shower with Magnetic Holder

- Position the magnetic hand shower holder over the top edge of the oven, in a convenient location
- Connect an appropriate unfiltered water source with an isolation valve
- A spare outlet exists on the stoddart supplied 4 way manifold see page 20

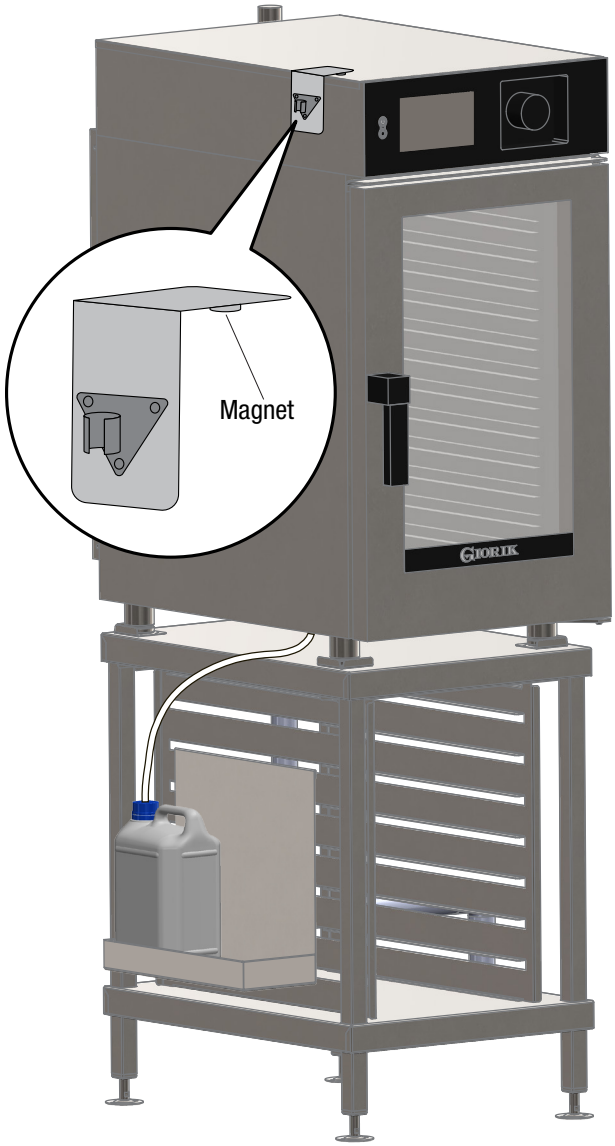

Due to continuous product research and development,
the information contained herein is subject to change without notice.

2.10 Oven Testing

The oven should be tested by completing a cooking cycle to verify that the equipment works properly, without any anomalies or problems.

Turn on the oven (See page 29)
Set a cooking cycle with temperature to 150°C, time set to 10min and humidity to 25% (See “Manual Cooking” page 34).
Press “Start/Stop”.

Carefully check the points given in the following list:

- Press the “LED Door Light” icon (See page 29), the LED door lights illuminate the oven chamber, press again to turn off
- The oven will stop if the door is opened and starts to work when the door is closed
- The thermostat that regulates the temperature in the cooking chamber is triggered when the set temperature is reached and the heating element is shut off temporarily
- The fan motor reverses the direction of rotation automatically; reversal takes place every 3minutes (time varies depending on the cooking time)
- For the ovens with two fans in the cooking chamber, the motors have the same direction of rotation
- At the end of the cooking cycle the oven emits an audible warning

2.9.1 Gas Oven Operation

Gas leakage and operation of the appliance must be tested by the installer before leaving. If the appliance fails to operate correctly after all checks have been carried out, Contact the Stoddart service department.
When the gas burner is operating the display screen will show a flame.

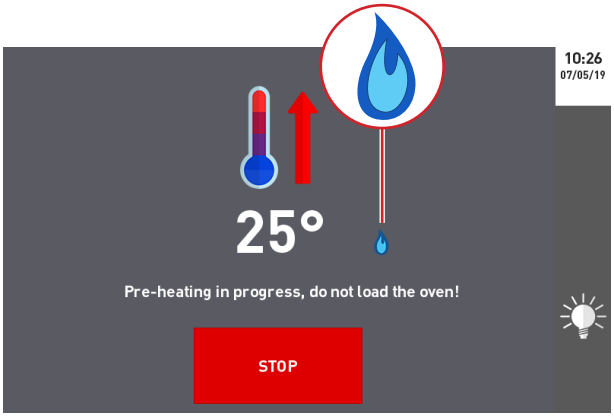

Specifications	
Model	KB061WT
W x D x H (mm)	519 x 865 x 792
Weight	92kg
Capacity	6 X 1/1GN
Power	3Ø + N + E 415VAC / 50Hz / 7.9kW 1Ø + N + E 240VAC / 50Hz / 7.9kW
Waste Connection	40mm
Cold Water Connection	3/4 BSP 150-350 kpa Min 10°C Max 30°C

Due to continuous product research and development,
the information contained herein is subject to change without notice.

3.1 Technical Specifications

3.1.1 KB061WT

Specification		
Standard Filter	KB061WT.SF	
Reverse Osmosis	KB061WT.RO	
W x D x H (mm)	519 x 865 x 792*	
*Dimensions do not include water filtration system		
Weight	92kg	
Capacity	6 x 1/1 GN Pans	
Total Connected Load	7.9kW / 20A circuit*	
Electrical Connection	3Ø + N + E 415VAC / 50Hz L1 = 10.4A / L 2 = 13.7A / L3 = 9.2A	
*Circuit required to be determined at installation by a qualified electrician.		
Cold Water Connection	3/4 BSP 150-350 kpa Min 10°C - Max 30°C	
Water Quality Requirements	**Hardness**	60-100ppm
	TDS	<100mg/L
	Cl Chloride	<32mg/L

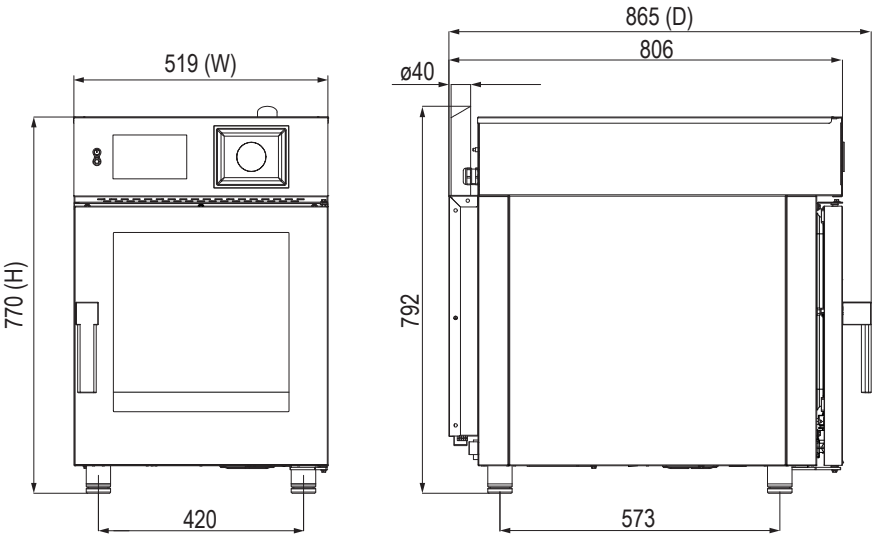

Legend

A	Electrical connection
B	Steam generation water inlet (3/4" BSP)
C	Wash system water inlet (3/4" BSP)
D	Drain connection
E	Humidity vent
F	Detergent & rinse aid inlet

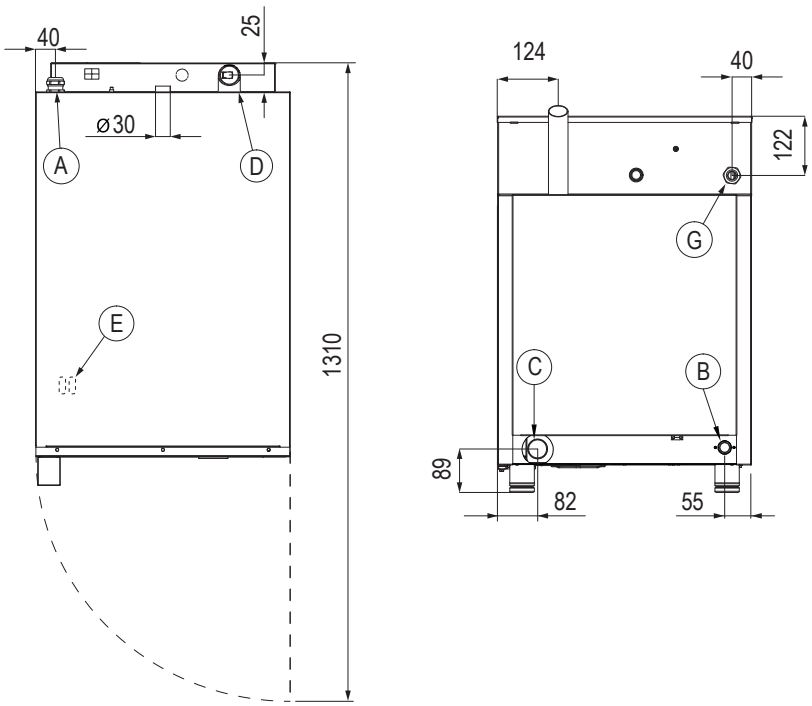

3.1.2 KB101WT

Specification		
Standard Filter	KB101WT.SF	
Reverse Osmosis	KB101WT.RO	
W x D x H (mm)	519 x 865 x 1032*	
*Dimensions do not include water filtration system		
Weight	110kg	
Capacity	10 x 1/1 GN Pans	
Total Connected Load	14.8kW / 25A circuit*	
Electrical Connection	3Ø + N + E 415VAC / 50Hz L1 = 20.7A / L 2 = 22.8A / L3 = 18.3A	
*Circuit required to be determined at installation by a qualified electrician.		
Cold Water Connection	3/4 BSP 150-350 kpa Min 10°C - Max 30°C	
Water Quality Requirements	**Hardness**	60-100ppm
	TDS	<100mg/L
	Cl Chloride	<32mg/L

Legend

A	Electrical connection
B	Filtered water inlet (3/4" BSP)
C	Drain connection
D	Humidity vent
E	Detergent & rinse aid inlet

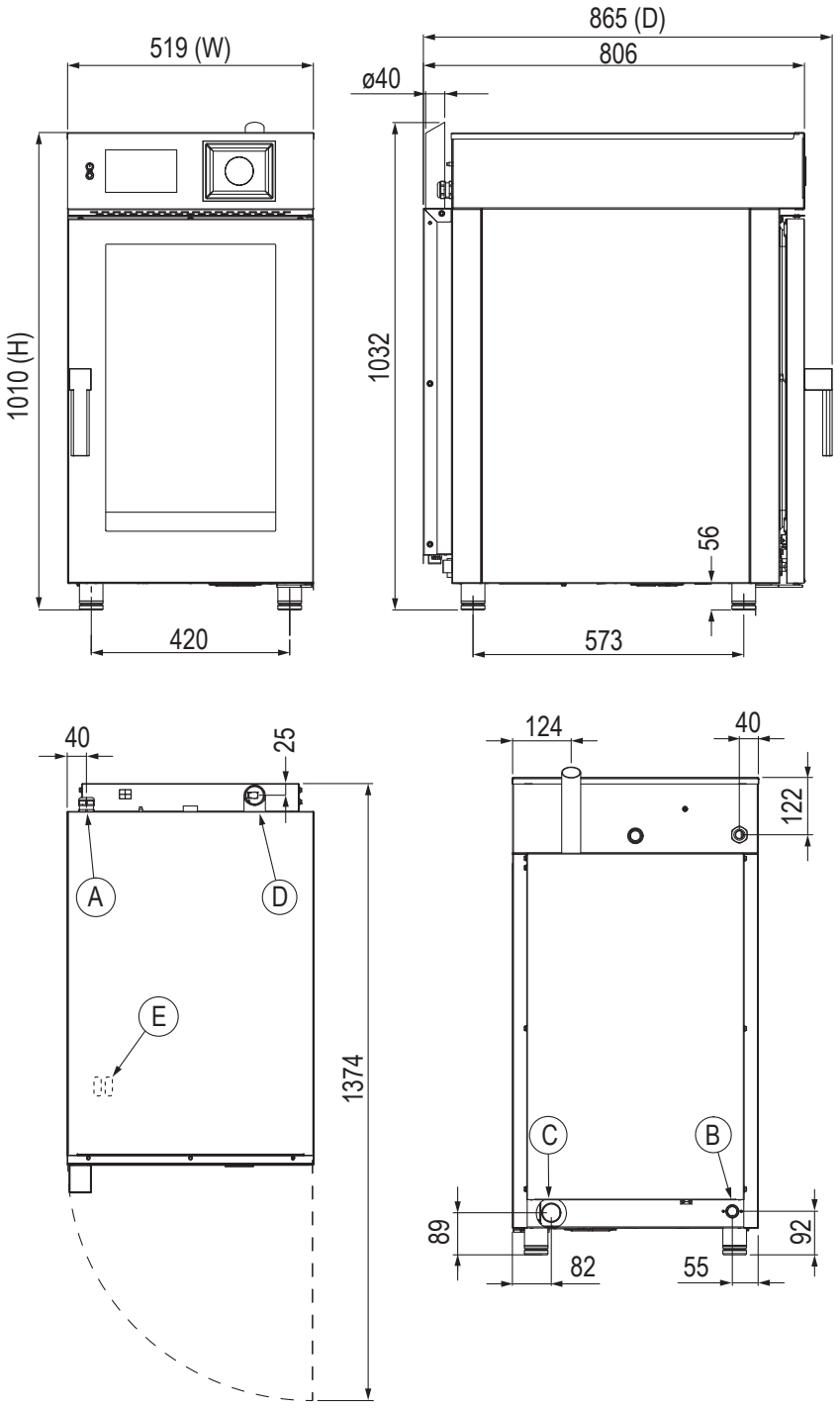

Due to continuous product research and development,
the information contained herein is subject to change without notice.

3.1.3 KBG061WT

Specifications:

Standard Filter	KBG061WT.SF	
Reverse Osmosis	KBG061WT.RO	
W x D x H (mm)	519 x 897 x 792*	
*Dimensions do not include water filtration system		
Weight	96kg	
Capacity	6 x 1/1 GN Pans	
Total Connected Load	1.3 kW	
Electrical Connection	1Ø + N + E 240VAC / 50Hz	
	Natural	**Universal LPG**
Gas Connection	1/2'' BSP	1/2'' BSP
Minimum Normal Test Gas Pressure	1.3 kPa	2.75 kPa
Maximum Normal Test Gas Pressure	3.5 kPa	3.5 kPa
Nominal Test Point Pressure	1.0 kPa	2.7 kPa
Total Nominal Gas Consumption	20 MJ/h	20 MJ/h

Note: It is the responsibility of the installing gas plumber to ensure correct supply and connection sustaining appropriate pressure, when all installed gas appliances are operating at maximum.

Cold Water Connection	3/4 BSP 150-350 kpa Min 10°C - Max 30°C	
Water Quality Requirements	**Hardness**	60-100ppm
	TDS	<100mg/L
	Cl Chloride	<32mg/L

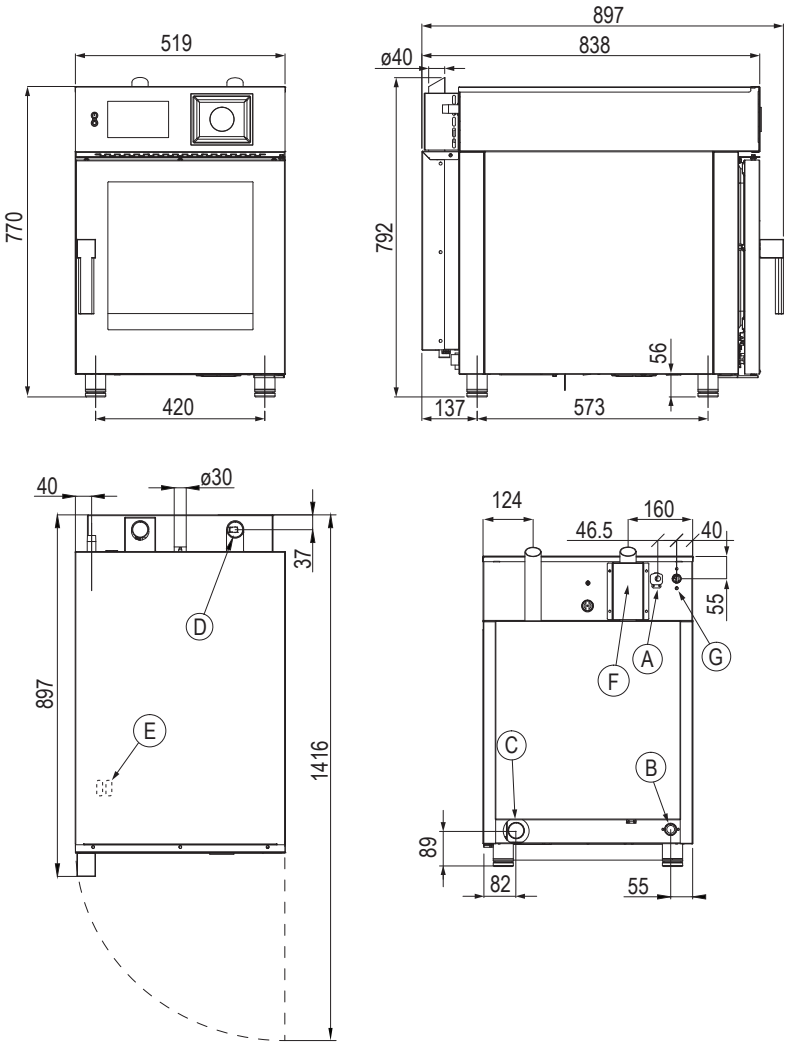

Legend

A	Electrical connection
B	Steam generation water inlet (3/4” BSP)
C	Wash system water inlet (3/4” BSP)
D	Drain connection
E	Humidity vent
F	Detergent & rinse aid inlet
G	Gas emission exhaust
H	Gas inlet (1/2” BSP)

3.1.4 KBG101WT

Specifications:		
Standard Filter	KBG101WT.SF	
Reverse Osmosis	KBG101WT.RO	
W x D x H (mm)	519 x 897 x 1072*	
*Dimensions do not include water filtration system		
Weight	118kg	
Capacity	10 x 1/1 GN Pans	
Total Connected Load	1.6 kW	
Electrical Connection	1Ø + N + E 240VAC / 50Hz	
	Natural	**Universal LPG**
Gas Connection	1/2'' BSP	1/2'' BSP
Minimum Normal Test Gas Pressure	1.3 kPa	2.75 kPa
Maximum Normal Test Gas Pressure	3.5 kPa	3.5 kPa
Nominal Test Point Pressure	1.0 kPa	2.7 kPa
Total Nominal Gas Consumption	40 MJ/h	40 MJ/h

Note: It is the responsibility of the installing gas plumber to ensure correct supply and connection sustaining appropriate pressure, when all installed gas appliances are operating at maximum.

Cold Water Connection	3/4 BSP 150-350 kpa Min 10°C - Max 30°C	
Water Quality Requirements	**Hardness**	60-100ppm
	TDS	<100mg/L
	Cl Chloride	<32mg/L

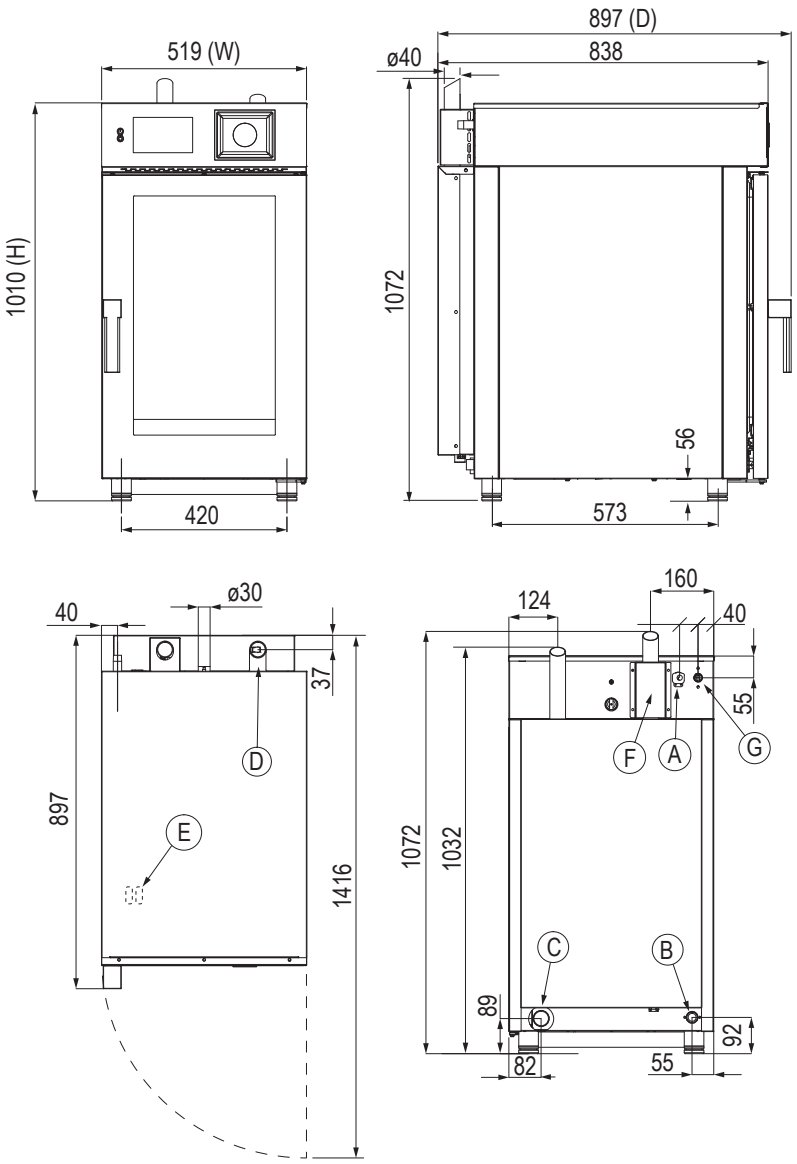

Legend

A	Electrical connection
B	Steam generation water inlet (3/4” BSP)
C	Wash system water inlet (3/4” BSP)
D	Drain connection
E	Humidity vent
F	Detergent & rinse aid inlet
G	Gas emission exhaust
H	Gas inlet (1/2” BSP)

Due to continuous product research and development,
the information contained herein is subject to change without notice.

4.1 General Overview

IMPORTANT

DO NOT STORE ANY ITEMS BETWEEN THE OVEN AND STAND
THE AIR INTAKE IS LOCATED AT THE BASE OF THE OVEN
DO NOT BLOCK AIR INTAKE

4.1.1 Control Interface

A. Start-up and Shut-down: Press the top section of the switch to turn the oven on, Press the bottom section of the switch to turn the oven off
B. Touch Screen: The operating parameters of the appliance are set and displayed on this screen
C. Navigation Dial: The dial is used to set the values on the screen. If the dial is pressed, the value entered is confirmed
D. Manual Cooking: Recipe settings are entered manually
E. Recipe Book: Default and saved recipes
F. Chamber Light: Turns the oven chamber light on/off
G. Settings: View/change oven settings

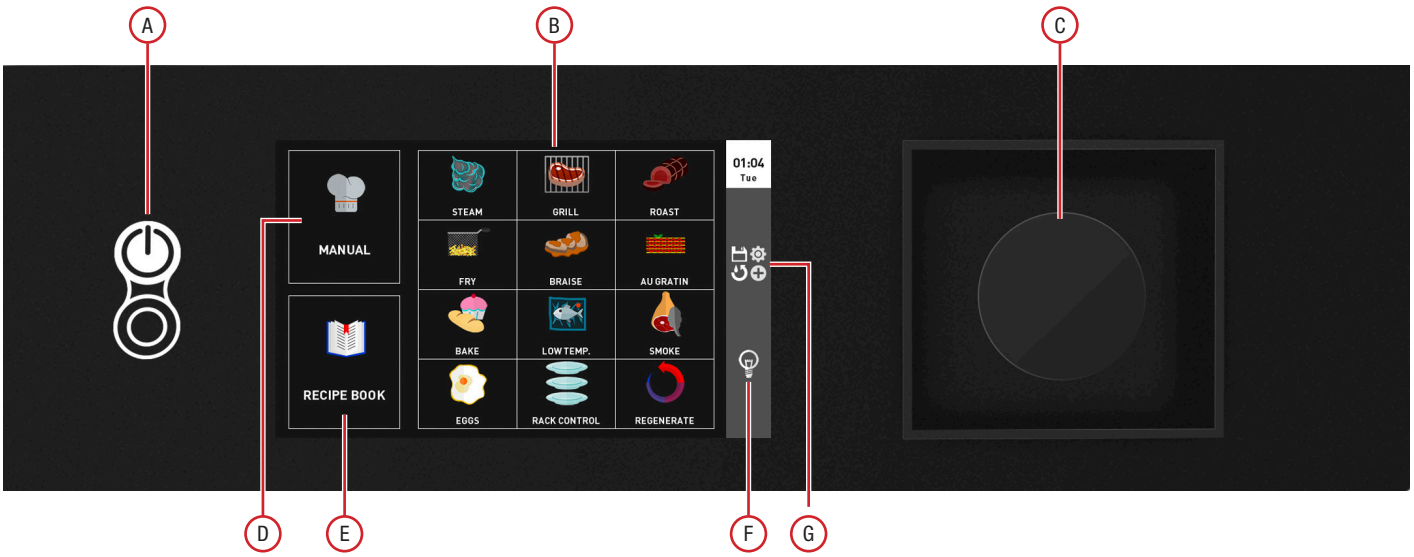

4.1.2 Gas Burner (Gas Models Only)

When the gas burner is operating the display screen will show a flame.

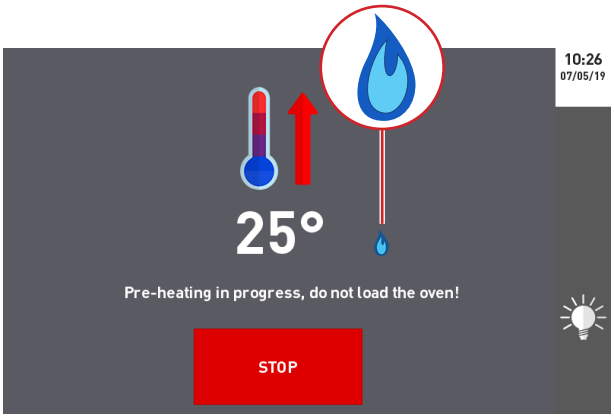

Due to continuous product research and development, the information contained herein is subject to change without notice.

4.1.3 No Gas Alarm - Reset

After three failed attempts to ignite the burner, an alarm screen appears on the display. When the screen appears, push the navigation dial for one second to reset the oven. After the reset, the appliance will make three more ignition attempts; if still no gas is detected, the alarm screen will reappear.

In this case, check that the gas shut-off valve upstream of the oven is open and active.

If these attempts are unsuccessful, Contact the Stoddart service department.

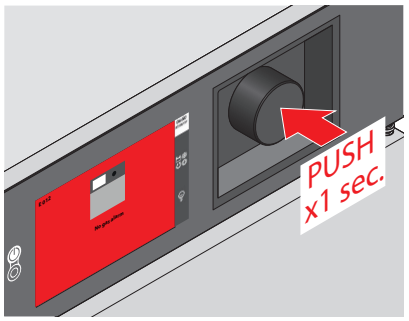

4.1.4 Cooking Methods

To cook varying types of food to perfection, a sequence of different cooking methods should be used.

Cooking Method	Temperature Range	Humidity Input	Humidity Extraction	Uses
Convection Cooking: Convection cooking uses the dry heat of the heating elements that the fans spread at a variable speed to ensure quick and even cooking.	30°C to 300°C	Manual input: By pressing and holding the humidity icon during the cooking cycle	Manual	Dry confectionery cooking Frozen food cooking External browning of foods Food grilling
Combi Cooking: Food is cooked with a humidity percentage set by the user. Ventilation inside the cooking chamber ensures quick and even cooking.	30°C to 270°C	Input: 0% to 100%	Automatic	Cooking of the dishes that must remain soft inside (e.g. Poultry) Leavening
Steam Cooking: Food is cooked using steam, which is evenly spread by the fans at a variable speed.	30°C to 120°C	100% fixed humidity (Cannot be adjusted)	Flue vent always closed	Vacuum cooking (sous-vide) Cooking of delicate dishes Cooking of creams and sauces Pasteurisation Regeneration Leavening
Smoking It allows the user to set a type of cooking suitable for using a smoking device (optional, contact the Stoddart sales department).	10°C to 200°C	No Input (Humidity cannot be added)	Manual	Meat cooking
Keep Warm: Keeps the temperature of the cooked food constant for a set or indefinite time	30°C to 120°C	Input: 0% to 100%	Automatic	Keeping cooked food warm

Due to continuous product research and development,
the information contained herein is subject to change without notice.

4.1.5 How to Navigate

A. Browse through the touch screen. When a value needs to be set, e.g. a temperature, Touch the value to be changed
B. Turn the navigation dial to the right to increase the value or to the left to decrease it
C. Press the navigation dial to save the set value

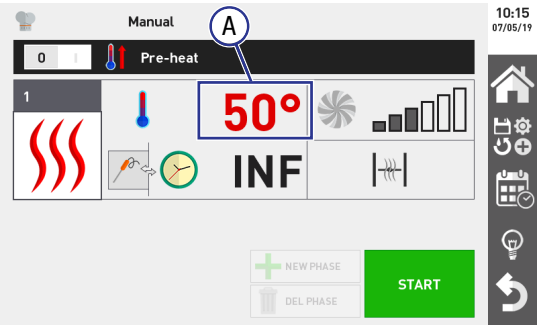

Touch screen display

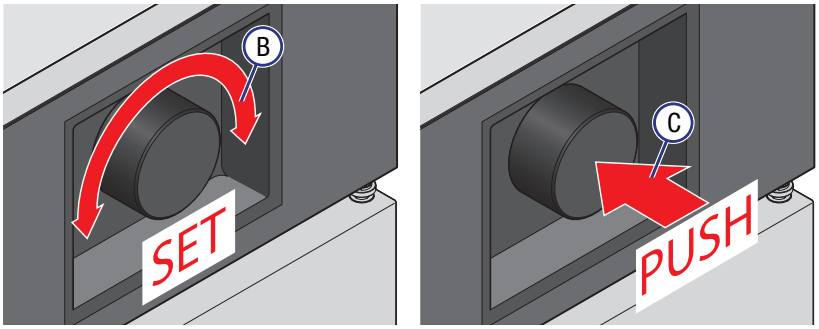

Navigation Dial

The symbols on the right-hand side of the display have the following functions:

	Home: • Return to home screen
	Settings menu: • Save or modify a recipe • Select and start a wash cycle • Cool off the chamber; • Access settings (e.g. language, time, etc.)
	Delayed start: • Set a delayed start
	Chamber Light: • Switch the light in the chamber on/off
	Return: • Return to the previous screen

Due to continuous product research and development,
the information contained herein is subject to change without notice.

4.2 Setup - Configuration Menu

4.2.1 Initial Settings - Date and Time / Language

Before commencing cooking, the initial setup needs to be entered, such as Time/Date and Language.

A. Press “Settings”
B. Press “Service”
C. Press “Configuration”
D. Select either “Date and Time” or Language
E. Press “+” or “-” to set the date (day - month - year, e.g. 26 March 2019) and the time (e.g. 15 and 50 minutes)
F. Press “OK” to confirm the settings
G. Set the time zone by selecting your geographic area (e.g. Australian EST (GMT + 10)

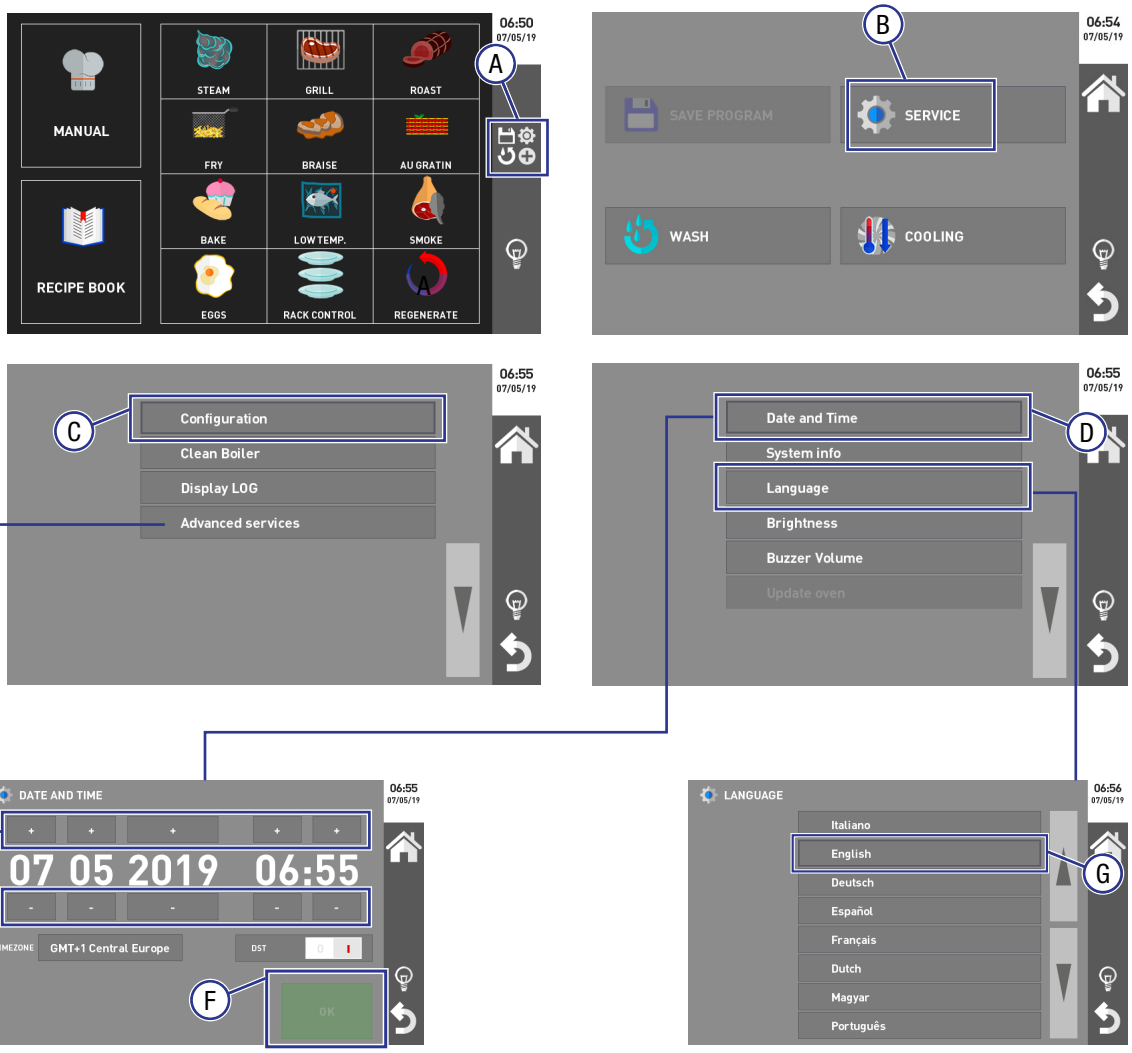

Note: If the oven is connected to a network, the oven can be set to automatically change to daylight savings time.

- “1”: the time is updated automatically, increasing or decreasing by one hour during the daylight savings period
- “2”: the time remains unchanged (the time can be manually adjusted if required)

Due to continuous product research and development,
the information contained herein is subject to change without notice.

4.2.2 System Information

System information allows the user to view the firmware information, serial number and Boiler hours.
To access the System information:

A. Enter the “Configuration” menu
B. Select “System Info”

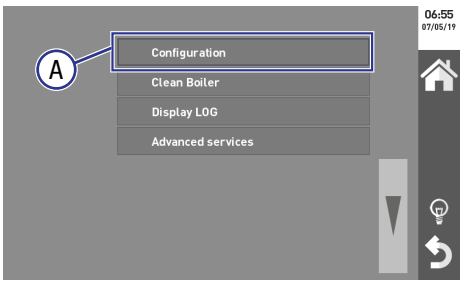

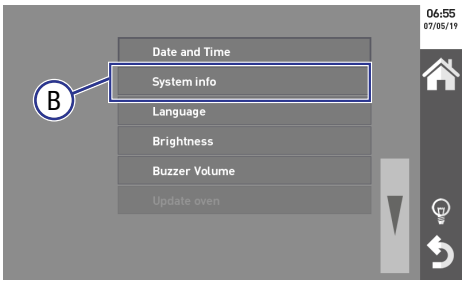

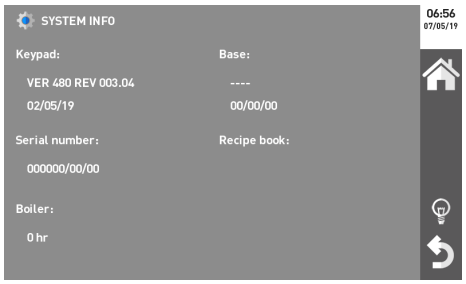

4.2.3 Display Brightness

Display brightness can be adjusted to suit the users preference.
To access Display Brightness:

A. Enter the “Configuration” menu
B. Select “Brightness”
C. Slide the white bar to adjust the brightness
D. Press “Save” to confirm

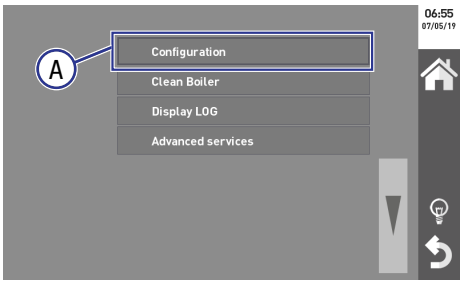

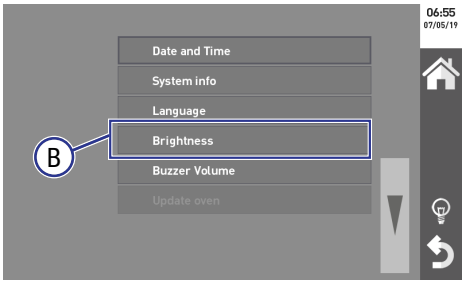

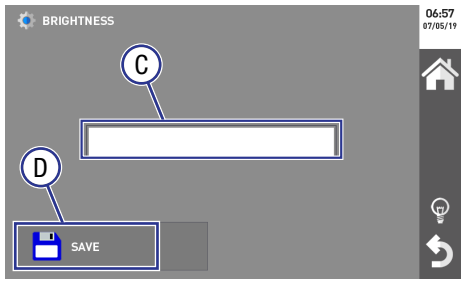

4.2.4 Buzzer Volume

Buzzer Volume can be adjusted to suit the users preference.
To access Buzzer Volume:

A. Enter the “Configuration” menu
B. Select “Buzzer Volume”
C. Slide the white bar to adjust the Buzzer Volume
D. Press “Save” to confirm

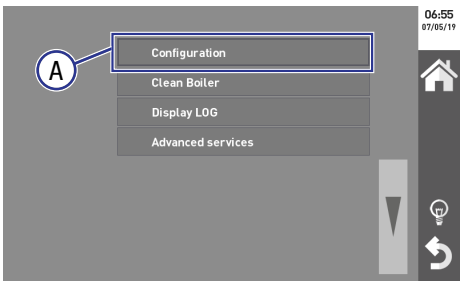

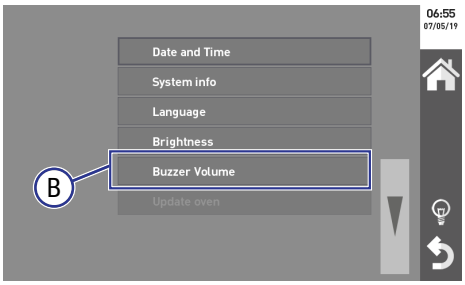

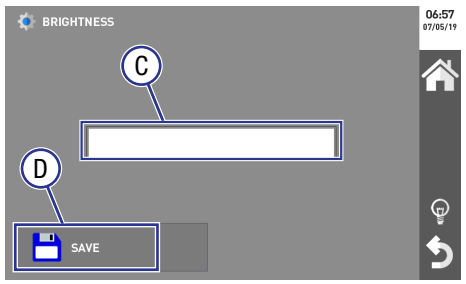

4.3 Manual Cooking

4.3.1 Initial Settings

It is possible and easy to create customised cooking programs that can have up to 9 different phases plus pre-heating.

Every cooking phase is represented by a cooking mode (convection, mixed, steam, etc.) with specific time, humidity, ventilation parameters, etc. For example: for a roast dish, a program can be created that contains a browning phase, a cooking phase and a hold phase.

Set the cooking parameters for one or more cooking phases. Once these settings are saved, a recipe can be started without saving (the entered parameters are not saved) or start a recipe after saving it (for future use).

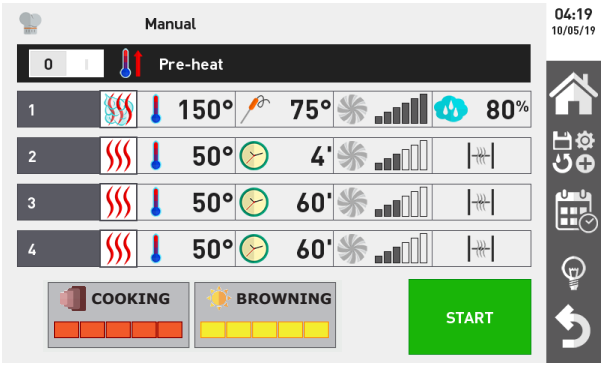

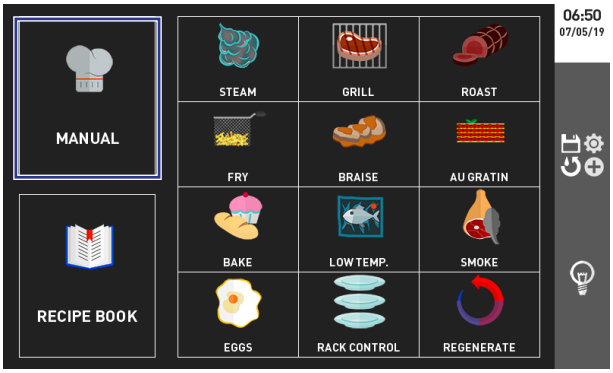

Manual cooking cycles require the following actions:

- Setting a manual pre-heating function (optional)
- PHASE 1 parameter settings
- Selecting the cooking method: convection / steam / combi
- Setting the temperature in the chamber
- Setting the duration of the cooking cycle (by setting the time or using a core probe)
- Setting fan speed
- Humidity input/extraction (depending on the cooking cycle chosen)
- Setting additional cooking phases (optional)
- Saving the recipe (optional)
- Starting a recipe

4.3.2 Selecting The Cooking Method

Select the cooking method required, by touching the relative icon (convection cooking mode in the example).

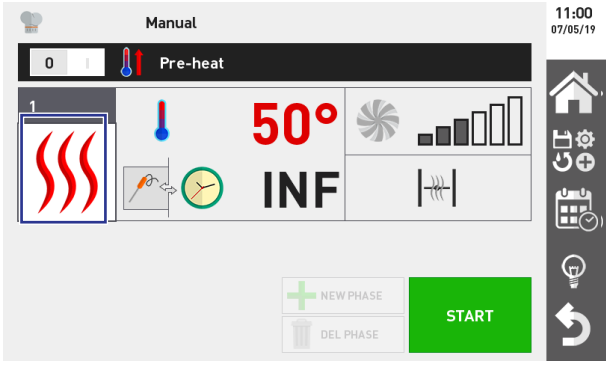

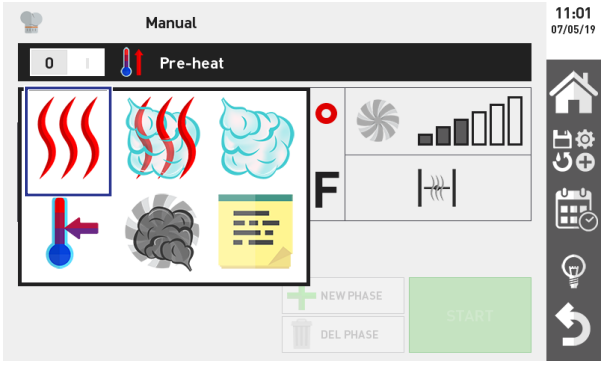

Due to continuous product research and development,
the information contained herein is subject to change without notice.

4.3.3 Selecting The Temperature

Choosing the correct cooking temperature is essential to achieve optimal results.
To set the temperature:

A. Touch the “temperature” field
B. Turn the navigation dial to select the desired temperature
C. Press the navigation dial to save the set value

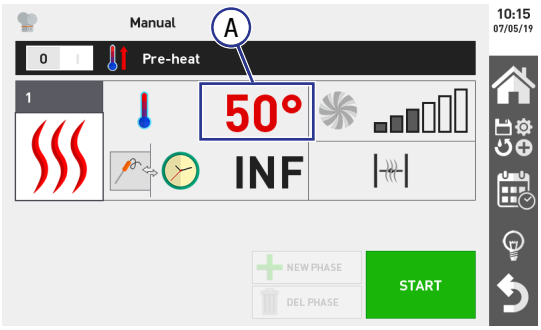

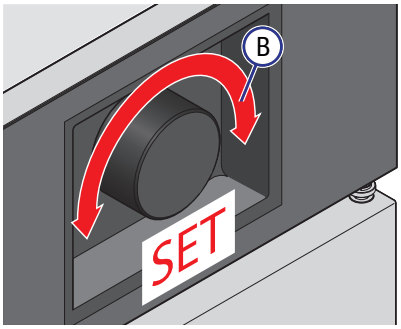

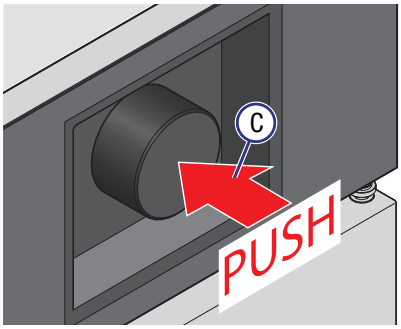

4.3.4 Setting Preheating

The preheating function is recommended for achieving optimal cooking results. This function can be toggled on or off by moving the 0/I cursor to the top right. Cursor on:

“0”: phase 1 starts immediately skipping the preheating stage.
“I”: preheating is enabled. The oven manages the temperature automatically based on the temperature you have set for phase

As soon as this temperature is reached, the oven emits an audible beeping and a window opens to indicate that the oven is ready to load. When the door is closed, phase 1 automatically starts according to the set parameters.

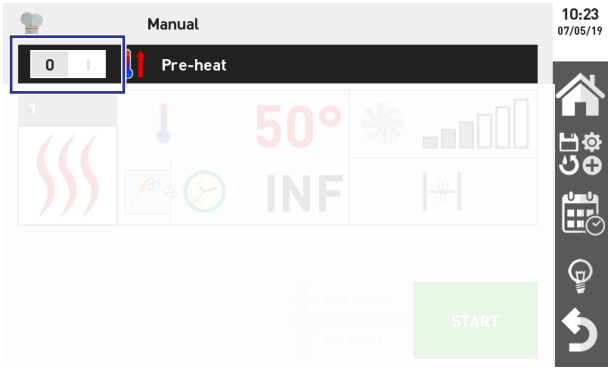

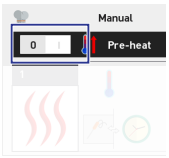

preheat off

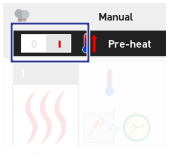

preheat on

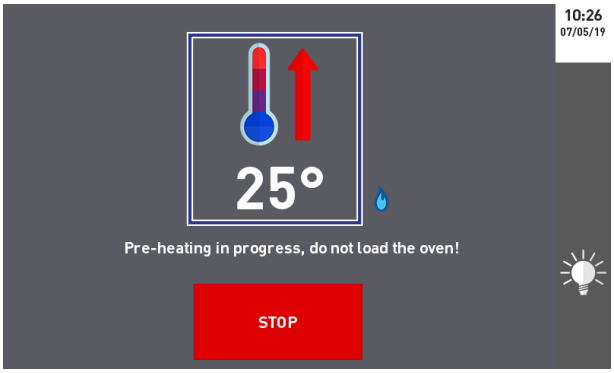

This screen displays the current temperature in the chamber (which will increase gradually) and warns that preheating is in progress. The oven requires the set temperature to be reached before introducing food into it. If necessary, the value can be changed by touching it and turning and pressing the navigation dial to the right.

4.3.5 Time Setting:



- Time setting:
  The cooking cycle stops automatically when the set time expires, range: 1 - 599 minutes (10 hours)

To set the time duration, choose whether to set the cooking by the time or with core probe or Delta T by touching the symbol (the example shows the end of cooking with core probe).

A. Select “Time”
B. Touch the value field to set the cooking minutes or the temperature to be reached by the core probe
C. Turn the navigation dial to adjust the temperature value
D. Press the navigation dial to save the set value

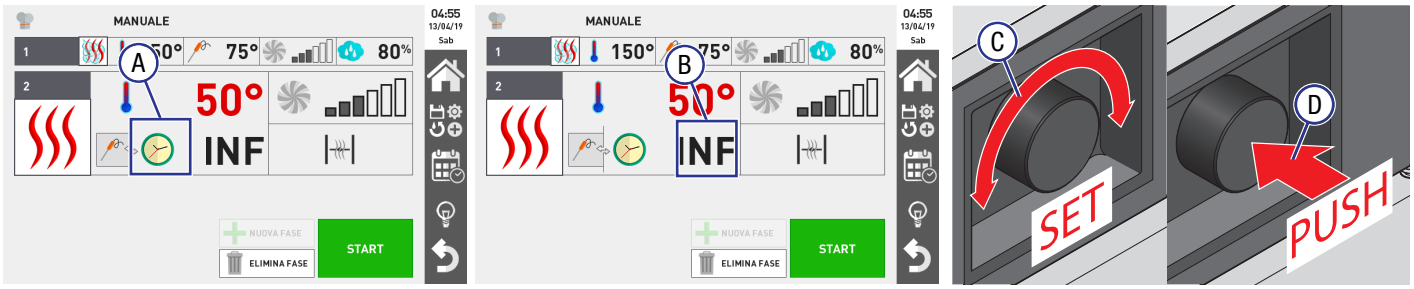

Note: To make the oven works continuously, Touch the time field and turn the navigation dial to the left until the display shows INF.
If the Delta T function is required, set the temperature of both the core probe and Delta T.

4.3.6 Core Probe:



- Core probe:
  the cooking cycle stops automatically when the temperature measured by the probe inside the food reaches the set value

To set the time duration, choose whether to set the cooking by the time or with core probe or Delta T by touching the symbol (the example shows the end of cooking with core probe).

A. Select Core probe
B. Touch the value field to set the cooking minutes or the temperature to be reached by the core probe
C. Turn the navigation dial to adjust the temperature value
D. Press the navigation dial to save the set value

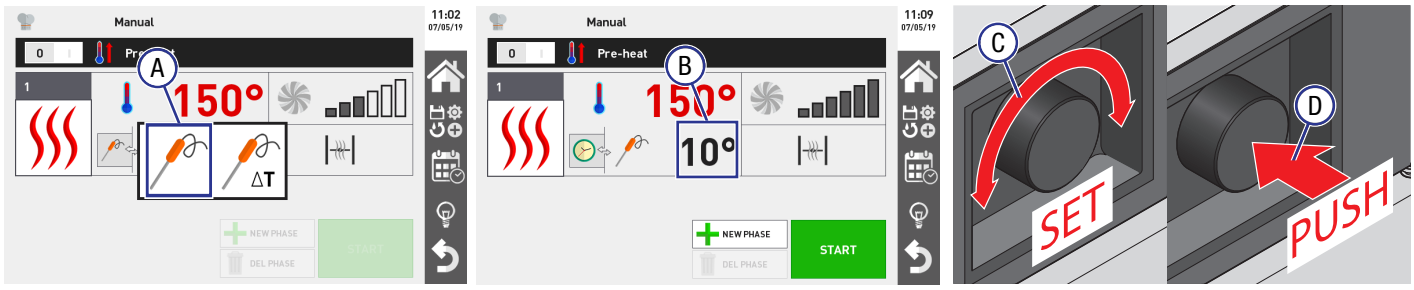

Note: When not in use, place the probe back into the magnetic support on the left side of the oven.
At the end of the cooking cycle, take care to remove the probe from the core before taking the tray out of the oven. The core probe is very sharp and it reaches high temperatures after cooking, do not pull the probe by the connection wire to remove it.
Do not insert the hot probe in frozen food to prevent thermal shock to the probe, which can cause the probe to become damaged.

Due to continuous product research and development,
the information contained herein is subject to change without notice.

4.3.7 Delta T(Δt):



- Delta T(Δt):
  During the cooking cycle, the oven increases or decreases the cooking chamber's temperature automatically to keep the Delta T (Δt) value constant (e.g. 30°C). These cooking cycles are perfect for cooking meat slowly and at low temperatures to keep it soft and tender without losing excessive weight.
  Delta T (Δt) = Temperature in the chamber - (minus) Probe core temperature

The Delta T(Δt) function is used mainly for slow, low temperature cooking.
In Delta T(Δt) mode, the product core temperature is set and the chamber temperature is set between 15°C - 30°C higher. As the core temperature rises, the temperature in the chamber will increase maintaining the set difference.
Note: A probe must be used for the Delta T(Δt) function.

To set the time duration, choose whether to set the cooking by the time or with core probe or Delta T by touching the symbol (the example shows the end of cooking with core probe).

A. Select Core probe then press the Delta T icon
B. Touch the value field to set the core probe temperature and the oven temperature (between 15°C - 30°C higher than the core probe)
C. Turn the navigation dial to adjust the temperature value
D. Press the navigation dial to save the set value

Core Probe / Delta T:

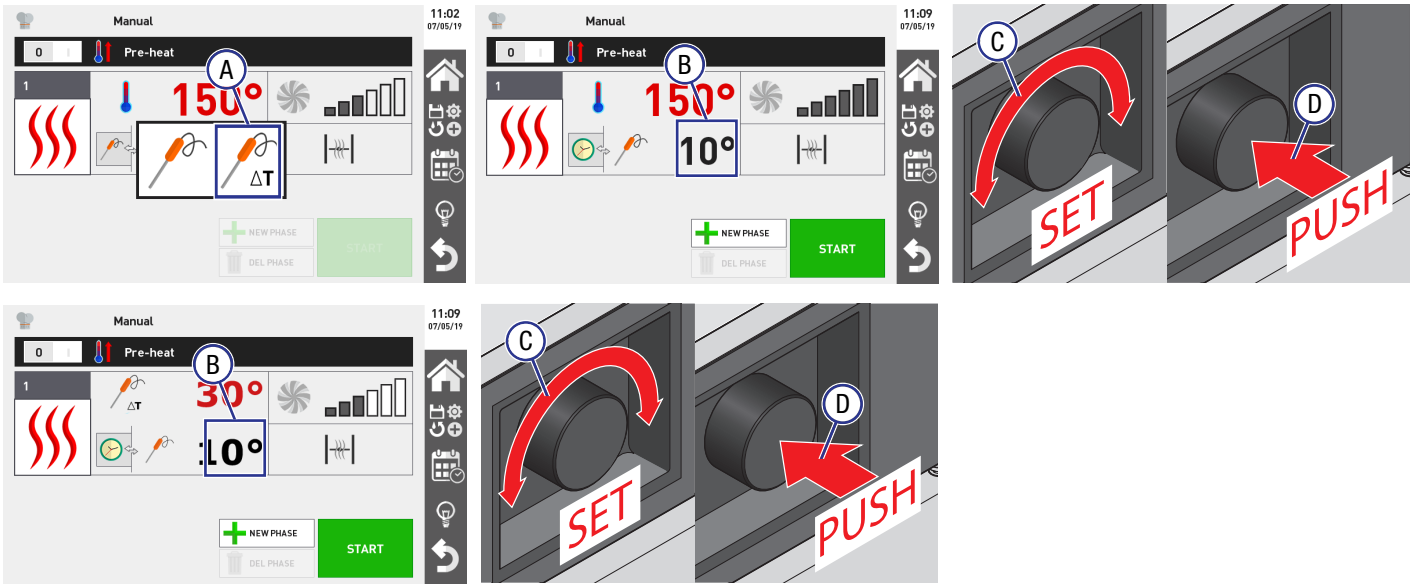

Note: When not in use, place the probe back into the magnetic support on the left side of the oven.
At the end of the cooking cycle, take care to remove the probe from the core before taking the tray out of the oven. The core probe is very sharp and it reaches high temperatures after cooking, do not pull the probe by the connection wire to remove it.
Do not insert the hot probe in frozen food to prevent thermal shock to the probe, which can cause the probe to become damaged.

Dishes	Recommended Core Temperature
Beef tenderloin	53-58°C
Beef (Ribs, entrecote, steaks)	From 50 °c to 55 °c: rare From 55 °c to 65 °c: medium From 66 °c to 70 °c: well done
Pork fillet	58-64°C
Roast veal	72-75°C

Dishes	Recommended Core Temperature
Porchetta (pork roast)	68-75°C
Lamb sirloin	58-65°C
Chicken - turkey (whole)	85-87°C
Salmon (fillets)	58-65°C
Shin of pork/ribs	80-85°C

4.3.8 Fan Rotation Speed

To set the fan speed:

A. Touch the fan field;
B. Turn the navigation dial to adjust the temperature value
C. Press the navigation dial to save the set value

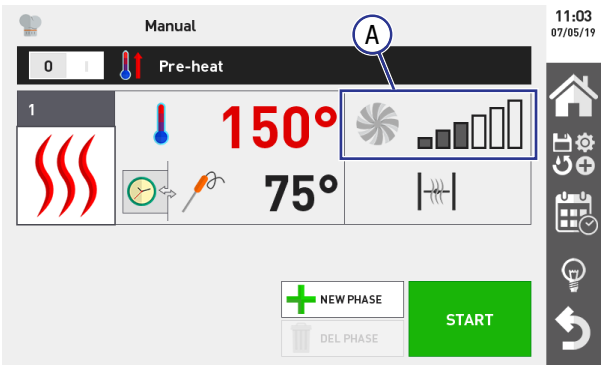

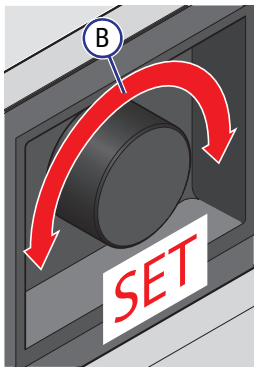

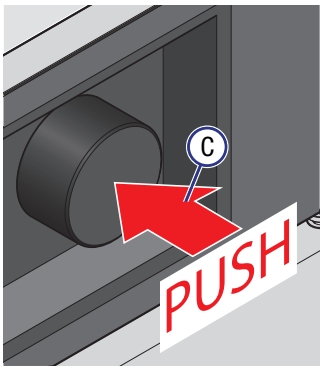

Note: For best cooking results, the fans reverse the rotation direction periodically. The oven manages this phase based on the cooking time set without the need for setting anything else.

4.3.9 Humidity

When using convection cooking, choose for the flue to be opened or closed. When using Combi or Steam cooking methods, the humidity value must be set.

To set humidity input/extraction:

A. Touch the humidity/extraction field
B. Turn the navigation dial to adjust the temperature value
C. Press the navigation dial to save the set value

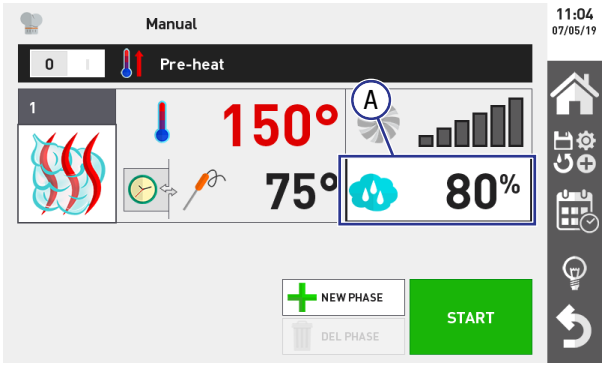

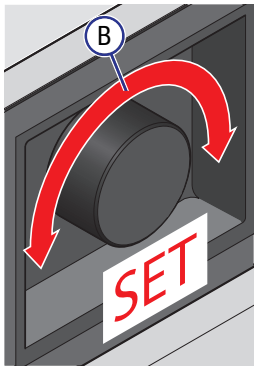

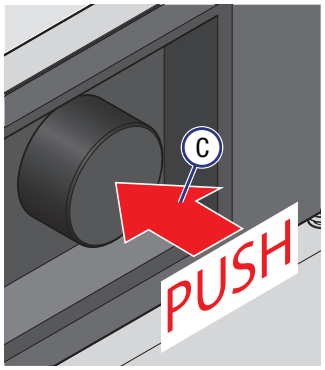

Type of cooking	Humidity input	Humidity extraction
Convection	Manual input By pressing and holding the humidity icon during the cooking cycle	Closed flue Open flue
Combi	0% Adjustable from 0% to 100%	The oven opens and closes the flue vent automatically
Steam	- +	Flue vent always closed

Due to continuous product research and development,
the information contained herein is subject to change without notice.

4.3.10 Setting additional cooking phases (optional)

After setting all phase 1 parameters additional cooking phases can be set if required.
Up to 9 cooking phases can be programmed, (each cooking phase can be used for different cooking methods and parameters).

Note: If phase 1 is set to INF, the oven runs continuously, this means that extra phases cannot be added.

To set other additional phases:

A. Touch the field "+ NEW PHASE"
B. Set the new phase, as shown in previous pages

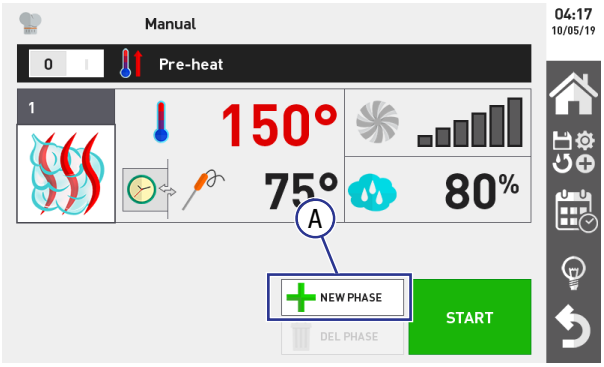

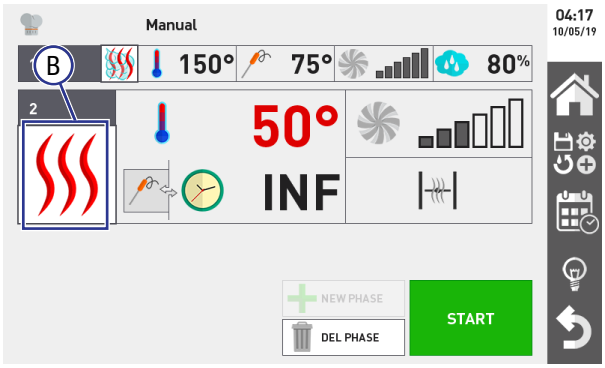

C. After this setting is complete, a list of the latest two set phases (e.g. phase 3 and 4) appears. Touch any phase to display them all

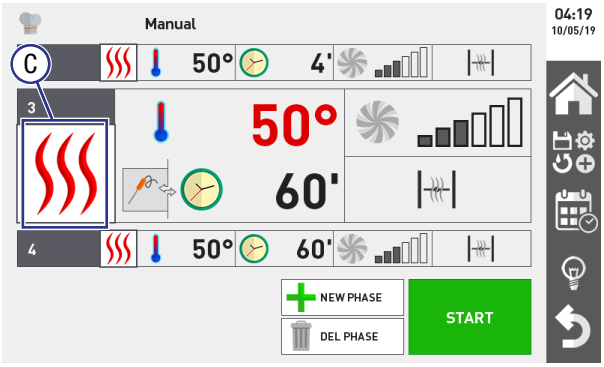

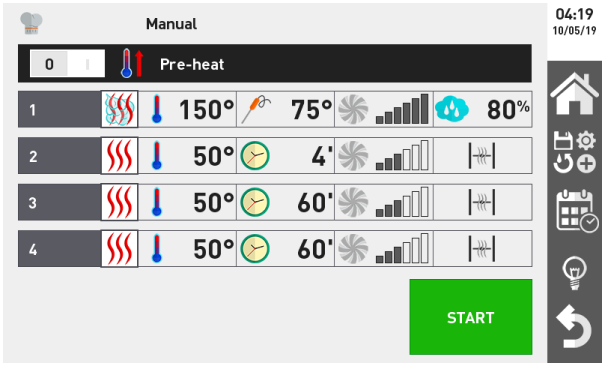

4.3.11 To Delete a Phase

A. Touch the phase to be deleted
B. Touch the "DEL PHASE" field. The phase is then removed from the list

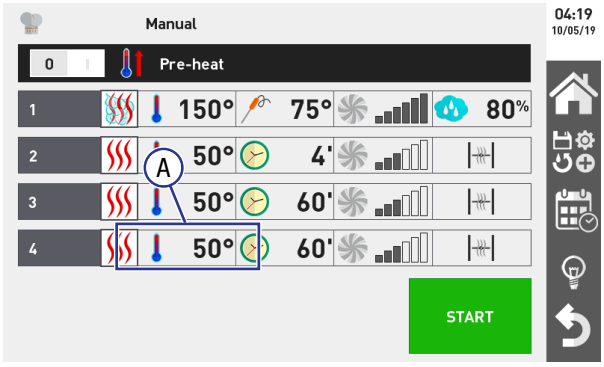

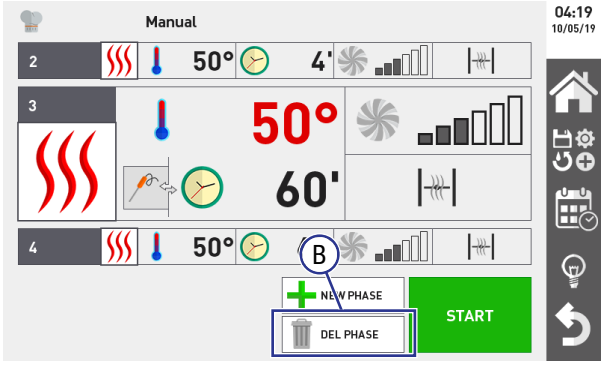

4.3.12 Holding Phase

The holding phase is usually the last phase to be set, with the purpose of maintaining the products at or above the food safe temperature (> 65°C) without cooking the product.

The holding phase, by default has the humidity set at 20% and the fan speed set at 1.
For effective holding, it is recommended not to adjust the fan speed. When holding roasted products, a humidity setting of 20% - 35% is recommended, in the case of brazing or stewing, a humidity setting of 90% - 100% is recommended.

To set a holding phase:

A. Touch the field "+ NEW PHASE"
B. Set the new phase by selecting the relative icon and setting it as described for phase 1 in the previous pages
C. To modify the hold phase, click on the cooking mode button (2) and select HOLD.

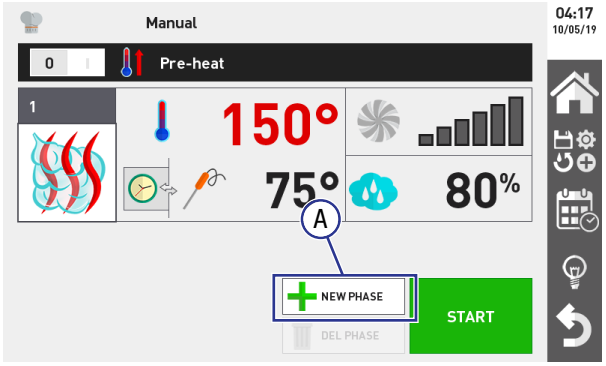

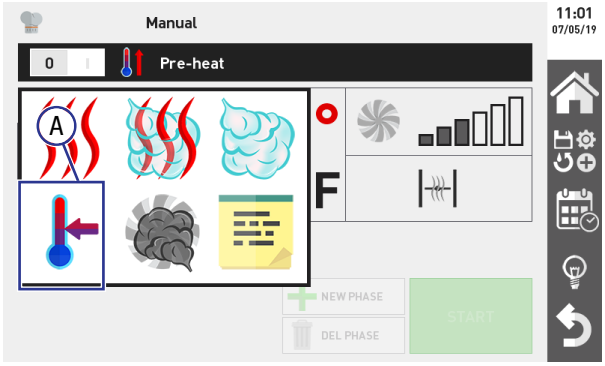

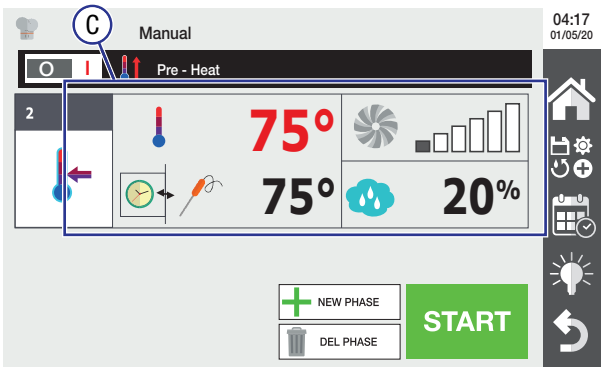

Due to continuous product research and development,
the information contained herein is subject to change without notice.

4.3.13 Setting New Phases With Text Messages

A phase can only contain one text message (e.g. check the cooking process or add bacon).

A. Select the text icon
B. Touch the “Enter message” field
C. Select the message among those available (e.g. “add salt”) by touching on it or create a new message
D. Using the pop-up keypad clicking “Enter” to confirm

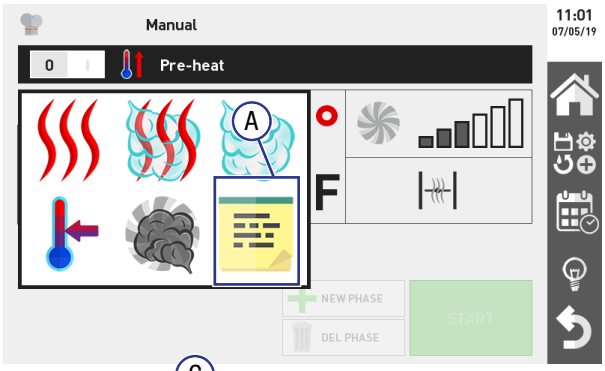

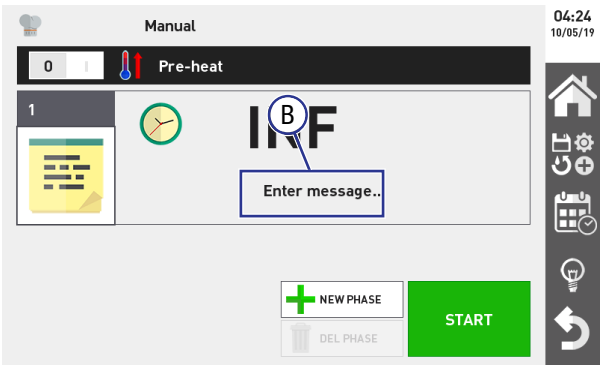

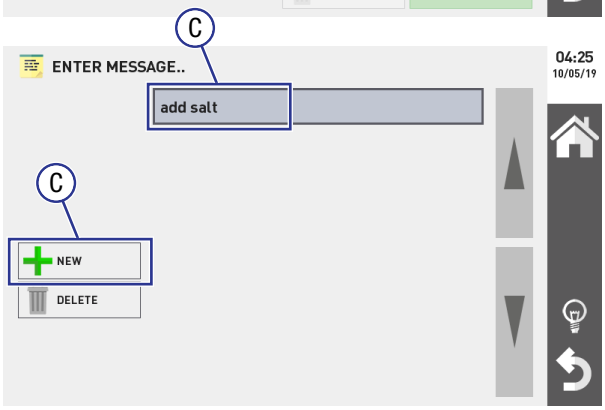

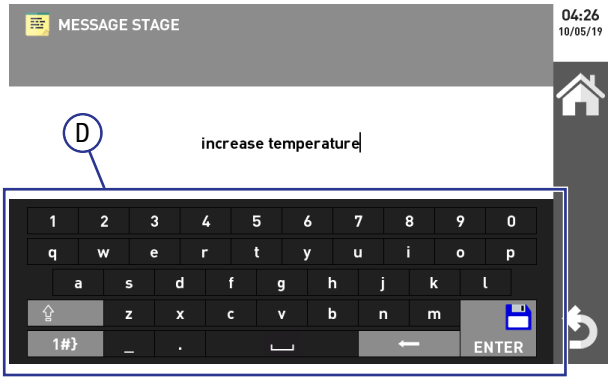

Note: While the message is displayed, the oven keeps running with the set temperature until “Done” is pressed (If programmed, the next phase will start).

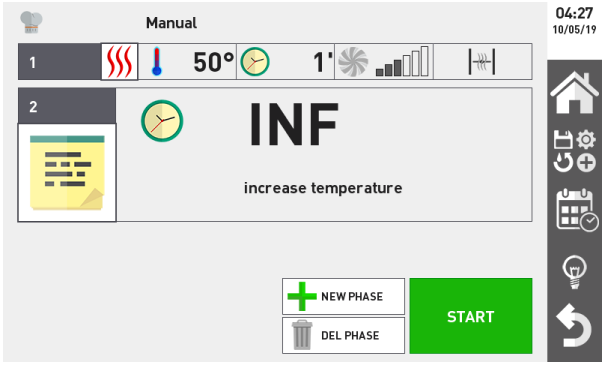

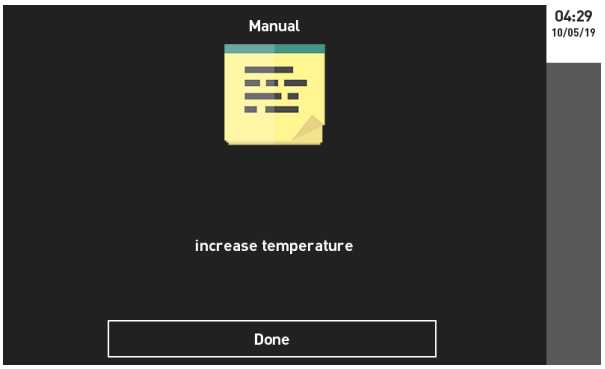

4.3.14 Saving a Recipe (optional)

Once the cooking method has been set, it is good practice to save the recipe, assigning search parameters and a name.

A. Touch the icon on the right
B. Touch the “Save program” icon
C. Touch the “Save” icon
D. Choose the search parameters to assign to the recipe (this will help to find it easily in the future).Press “FORWARD” to confirm
E. Assign a name to the recipe using the keypad (e.g. “Lasagne”) press ENTER to confirm
F. Depending on the type of cooking method, the oven may ask to indicate the type of colouring, humidity percentage or cooking level (e.g. cooking method: ROAST), Touch the symbol and set the desired value

Note: The recipe can be started immediately by touching the “Start” key, or exit the window using the key, to be used later.

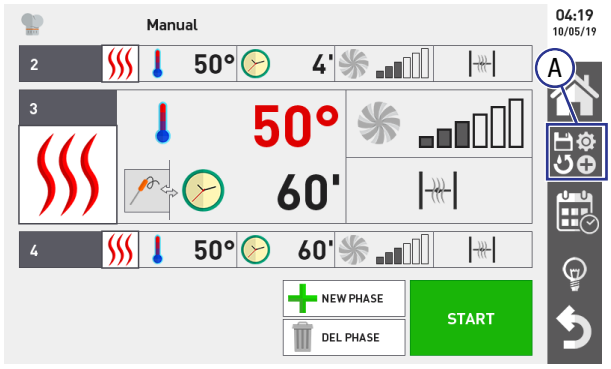

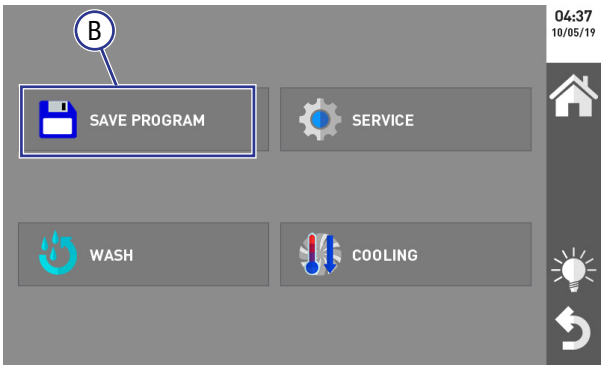

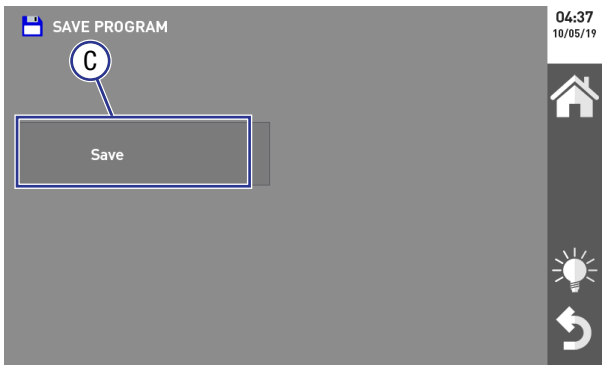

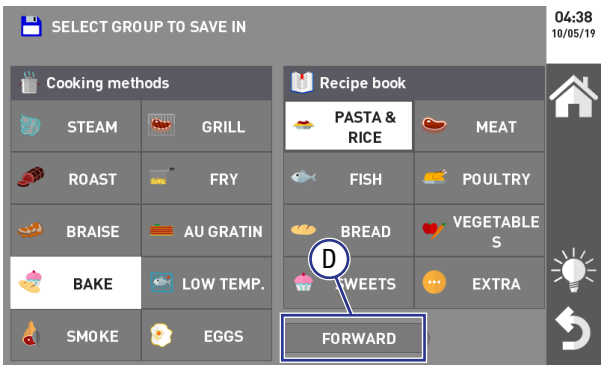

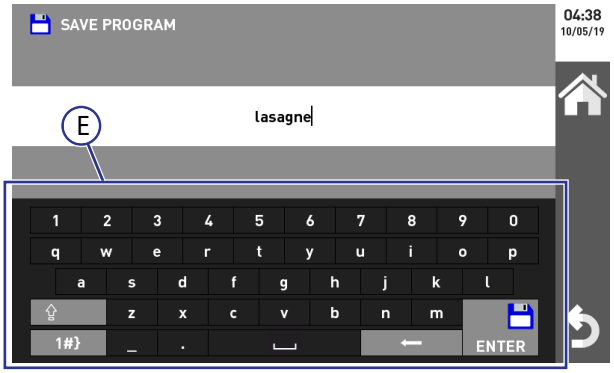

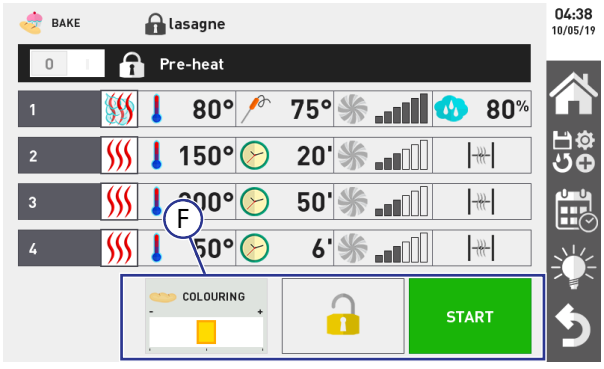

Due to continuous product research and development,
the information contained herein is subject to change without notice.

4.3.15 Saved Recipes

Recipes will be saved in the Automatic Cooking section (Recipe book/Cooking methods) under the default recipes (shown in alphabetic order).

Saved recipes, unlike default recipes, can be modified at any time (names / parameters). This will permanently overwrite the recipe.

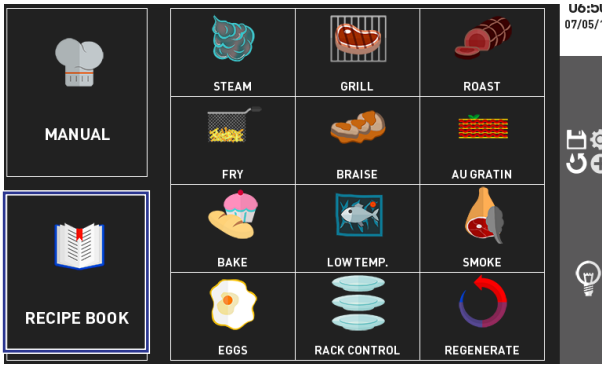

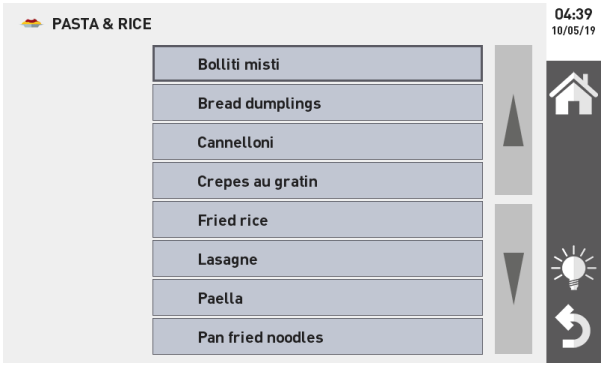

4.3.16 Start Recipe

Once recipe has been set and saved (optional) press “Start” to begin program.

- If preheating is active (0/I on “I”), do not introduce food into the oven chamber until the audible sound is emitted
- If preheating is not active (0/I on “0”), immediately introduce the food into the oven chamber

As soon as the oven door is closed, cooking phase 1 starts according to the set parameters.
At the end of phase 1, the subsequent phases (if any) start immediately.

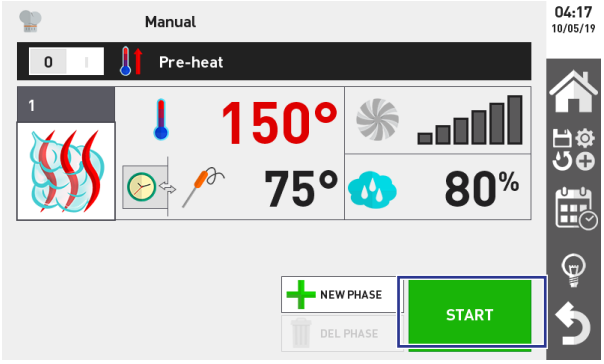

Current temperature in the cooking chamber. To know the set temperature, touch the “set” button

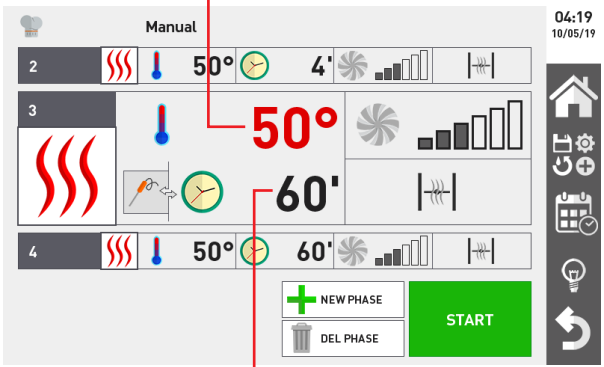

Time remaining until the end of the cooking cycle (if set by the time) or temperature measured by core probe (if set with the core probe). To know the set value, touch the “set” button

Due to continuous product research and development, the information contained herein is subject to change without notice.

The cooking cycle will end when the set time elapses (end of timed cooking) or when the core temperature or Delta T temperature is reached (end of cooking with core probe or Delta T).
At the end of the cooking cycle, the audible sound is emitted and a window will pop up indicating cooking has completed and to remove the trays from the chamber.



The same cooking method is available after the finished dish is removed from the oven.

- If necessary, restart it by pressing “Start”
- To pause a cooking cycle earlier, press “Stop”

To make changes during a cooking cycle, touch the parameter to be changed and turn and press the navigation dial.

Due to continuous product research and development,
the information contained herein is subject to change without notice.

4.4 Automatic Cooking

4.4.1 Recipe Selection

The recipe book contains pre-set and customised recipes.
Recipes can be categorised by cooking methods (e.g. steam, braise, etc.) or categories (e.g. pasta & rice, meat, etc.). To switch between these two search methods, touch the “Recipe book/cooking methods” icon.

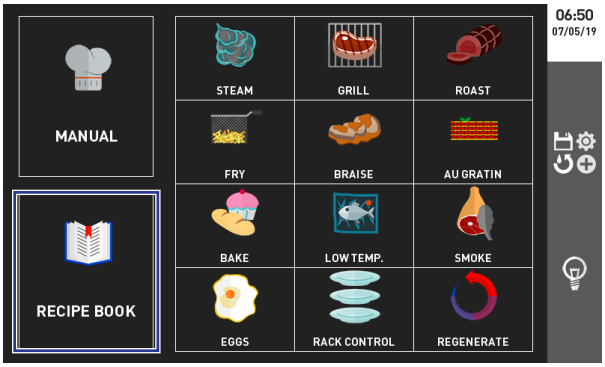

Cooking Methods

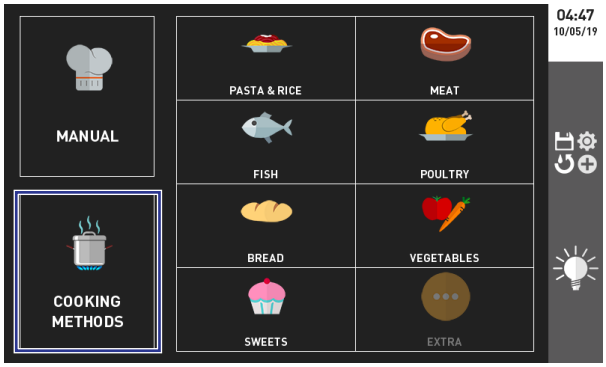

Recipe Book

4.4.2 How To Use The Automatic Cooking Program

A. Select the cooking method/category containing the recipe required (e.g. steam)
B. Select the required recipe (e.g. Boiled beef)
C. Based on the recipe, choose the colouring, humidity percentage or the cooking level by touching the symbol and setting the desired value
D. (Optional) apply changes to the cooking parameters (e.g. increase the temperature) by touching the lock at the bottom and change the parameters by touching the field of interest, turning the navigation dial and pressing it to save the entered value
E. Begin the cooking cycle by pressing”Start”.
Where applicable, wait for the end of the preheating phase before introducing the food to be cooked

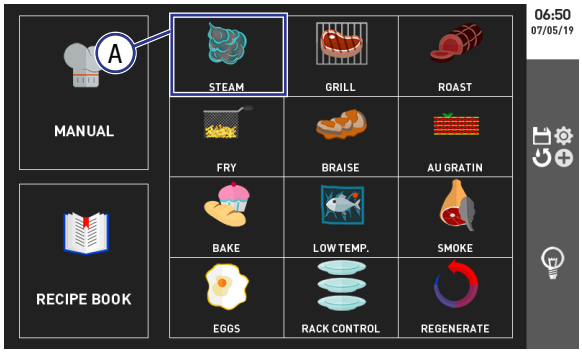

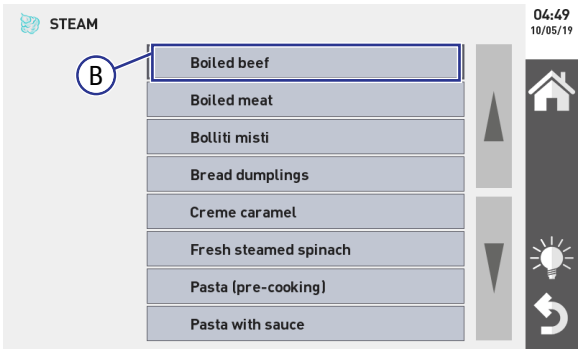

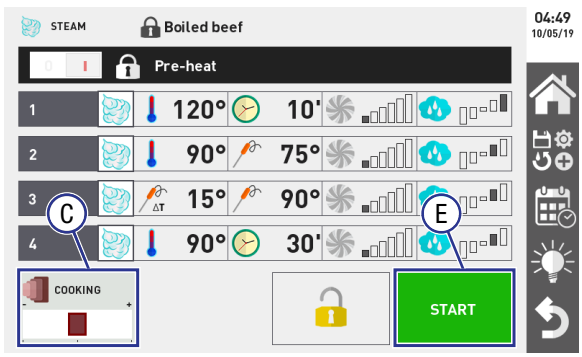

Default Recipes
The changes applied are temporary, i.e. they apply only to the cooking cycle to be started. The original recipe will keep its initial parameters.

Custom Recipes
The changes applied are permanent, i.e. the original recipe will be changed without giving the possibility to recover the previous parameters.

4.5 Special Automatic Cooking Programs

4.5.1 Regeneration

The Regenerate function brings pre-cooked food and food stored in a cold room, to the ideal temperature and appearance.

The regeneration function can be set two ways:

CRISPY
Ideal for lasagne, crepes, and potatoes.

SOFT
Ideal for delicate products, such as fish, roasts, or vegetables.

The duration of the regeneration cycle can be set two ways:

TIME
The cooking cycle stops automatically when the set time expires (range: from 1 minute to 40 hours)

CORE PROBE
The cooking cycle stops automatically when the set temperature value for the probe inside the food has been reached

Regenerate:

A. Press “Regenerate”
B. Select “Manual”
C. Select “Crispy” or “Soft”
D. Select “Time” or “Core Probe”
E. Turn the navigation dial to adjust the temperature value
F. Press the navigation dial to save the set value
G. Touch “Start” for the regeneration cycle to begin

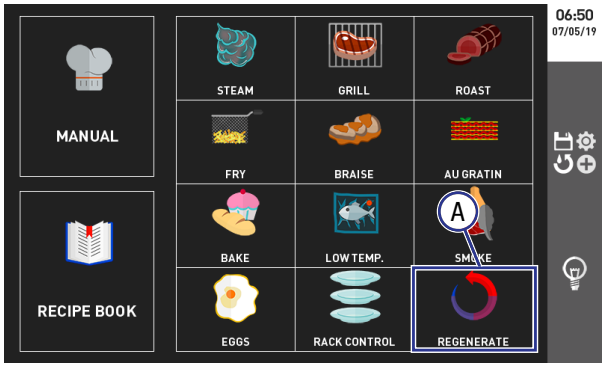

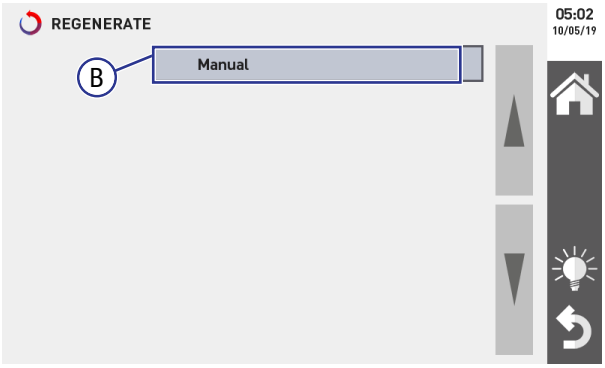

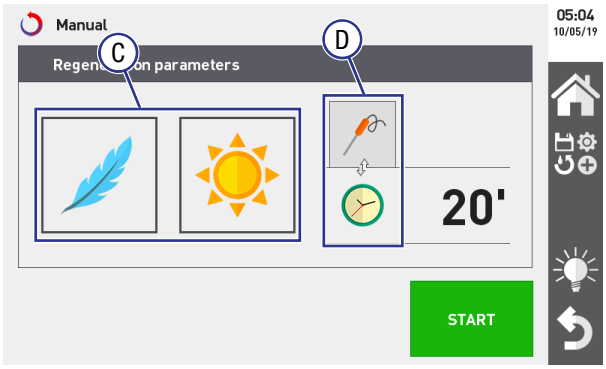

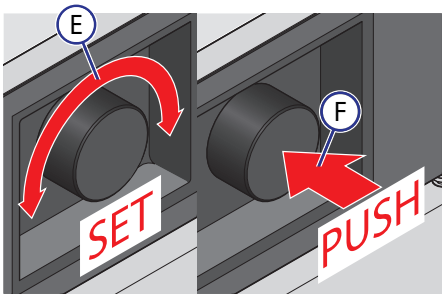

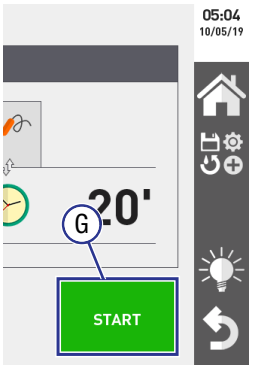

Due to continuous product research and development,
the information contained herein is subject to change without notice.

4.5.2 Rack Control - Manual Setting

Manually set timers for each tray (up to 6 or 10 depending on the oven model).

- Once cooking parameters have been set, up to 10 timers can be manually set (each one is assigned to a tray)
- Timers can be set by “Time” and/or one timer can be set using “Core Probe”
- As soon as the set time elapses (if duration is set by the time) or the core probe reaches the set temperature, an audible sound will be emitted and the message “End” will display to warn the operator about which trays are ready to be removed from the oven, while the others keep cooking (the oven runs in INFINITE MODE)

Manual Setting:

A. Press “Rack Control”
B. Select “Manual”
C. Enter the cooking parameters
D. Select a tray
E. Select “Time” or “Core Probe”
F. Turn the navigation dial to adjust the value
G. Press the navigation dial to save the set value to the selected tray. Repeat for the required amount of trays
H. Touch “Start” for the rack control to begin
I. The countdown timers start
J. Trays showing “END” can be removed from the oven

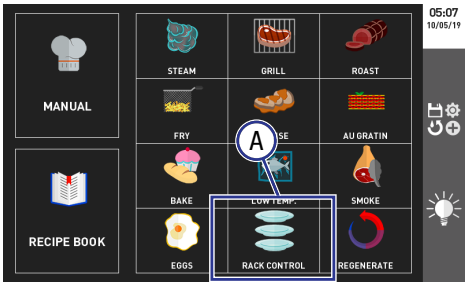

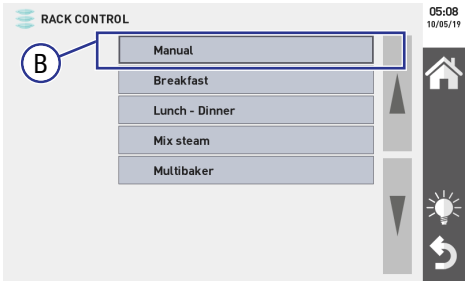

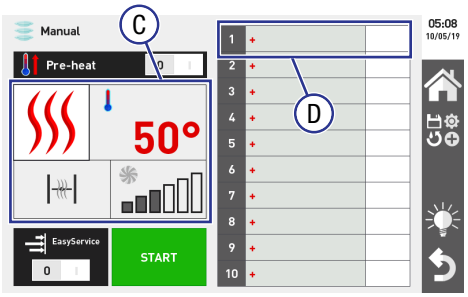

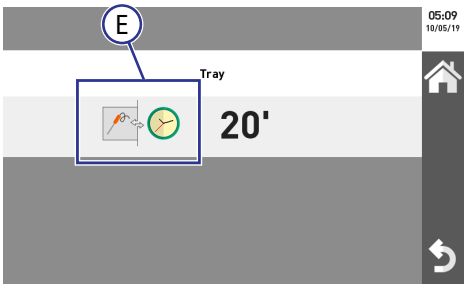

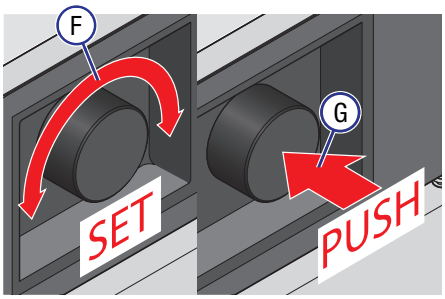

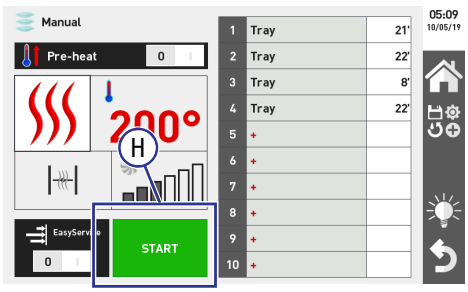

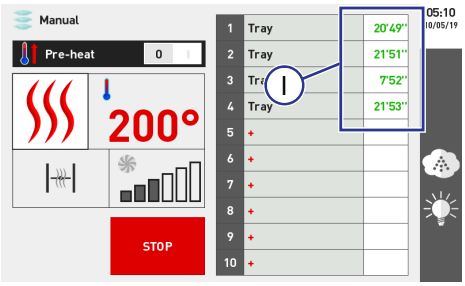

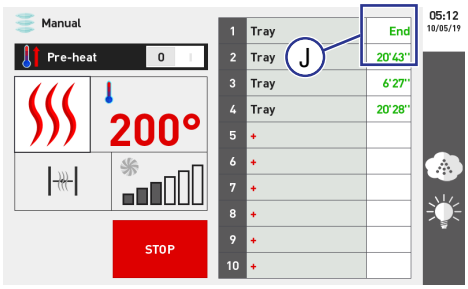

Due to continuous product research and development, the information contained herein is subject to change without notice.
www.stoddart.com.au
www.stoddart.co.nz

4.5.3 Rack Control - Menu Setting

Pre-set menus (e.g. breakfast, multibaker, etc.), where typical dishes are already loaded with timers already assigned

- Once the cooking parameters have been set, select a menu containing dishes with assigned timers.
  This allows the menu to be customised based on the users requirements
- As soon as the set time elapses (if duration is set by time) or the core probe reaches the set temperature, an audible sound will be emitted and the message “End” will display to warn the operator about which trays are ready to be removed from the oven, while the others keep cooking (the oven runs in INFINITE MODE)

Manual Setting:

A. Press “Rack Control”
B. Select the customised menu e.g. “Breakfast”
C. Enter the cooking parameters
D. Select a tray
E. Select a menu item to be assigned to the selected tray e.g. “Toast”, or press “+NEW” to create a new menu item
   Repeat for the required amount of trays
F. Touch “Start” for the rack control to begin
G. The countdown timers start
H. If needed the pre-set timers can be adjusted. Select the tray to be adjusted. Select “Time” or “Core Probe”
I. Turn the navigation dial to adjust the value
J. Press the navigation dial to save the set value to the selected tray
K. Trays showing “END” can be removed from the oven

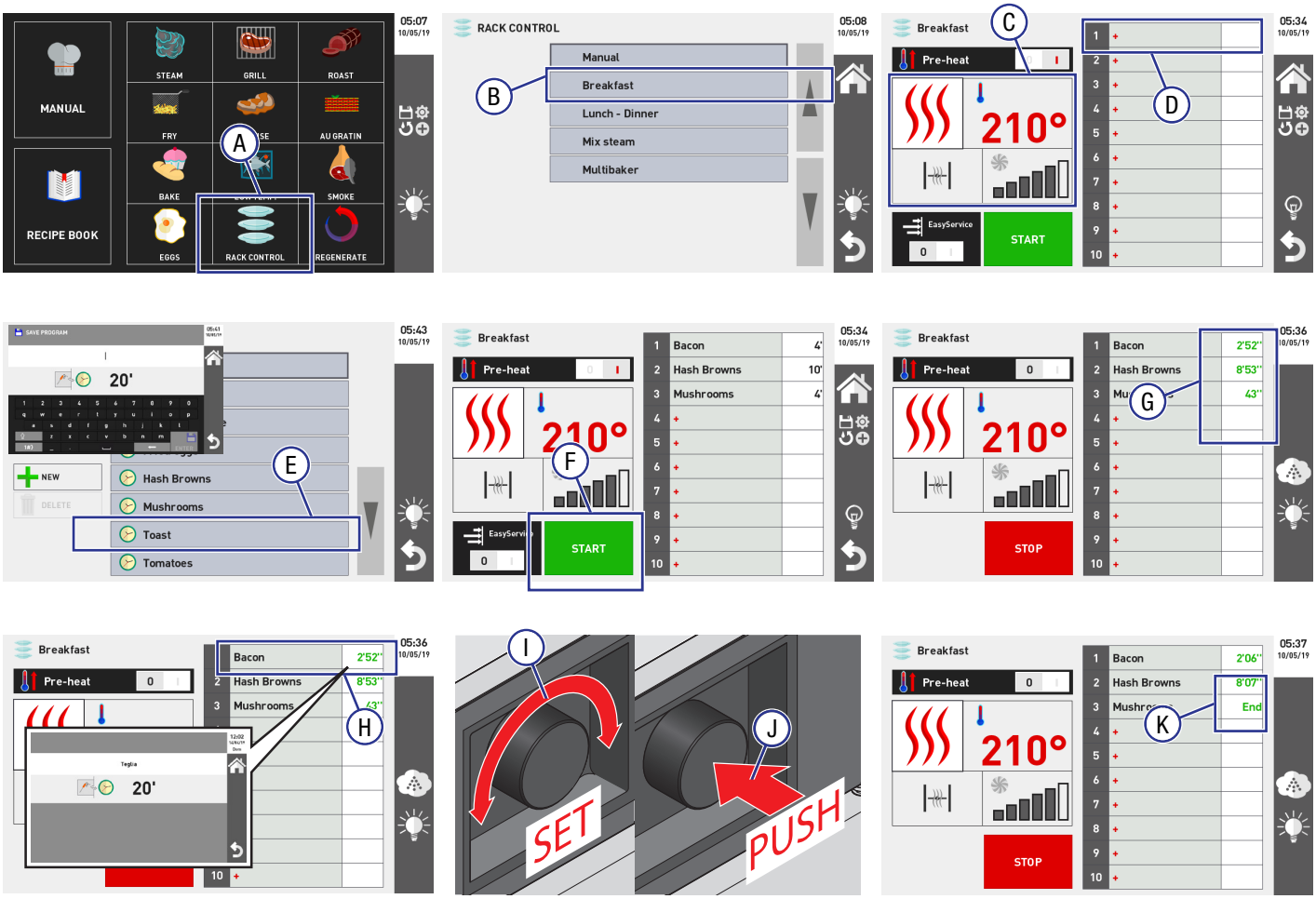

Due to continuous product research and development,
the information contained herein is subject to change without notice.

4.5.4 Rack Control - Easy Service

Once the cooking times for each tray have been set (see points - manual setting or menu setting), the EASY SERVICE function can also be selected.
In this case, the dishes will be ALL ready at the same time, as the oven will warn the operator when it is time to put a tray in the oven cavity, based on the duration of the cooking cycle set for each tray.

Manual Setting:

A. Press “Rack Control”
B. Select the customised menu e.g. “Breakfast”
C. Enter the cooking parameters
D. Select “Easy Service”
E. Select menu items. Menu items will be assigned to trays in the order starting at 1 in the order selected
F. Touch “Start” for the rack control to begin
G. The countdown timers start. To have the trays ready at the same time, place the “IN” tray into the oven first (add each additional tray as required)
H. If needed the pre-set timers can be adjusted. Select the tray to be adjusted. Select “Time” or “Core Probe”
I. Turn the navigation dial to adjust the value
J. Press the navigation dial to save the set value to the selected tray

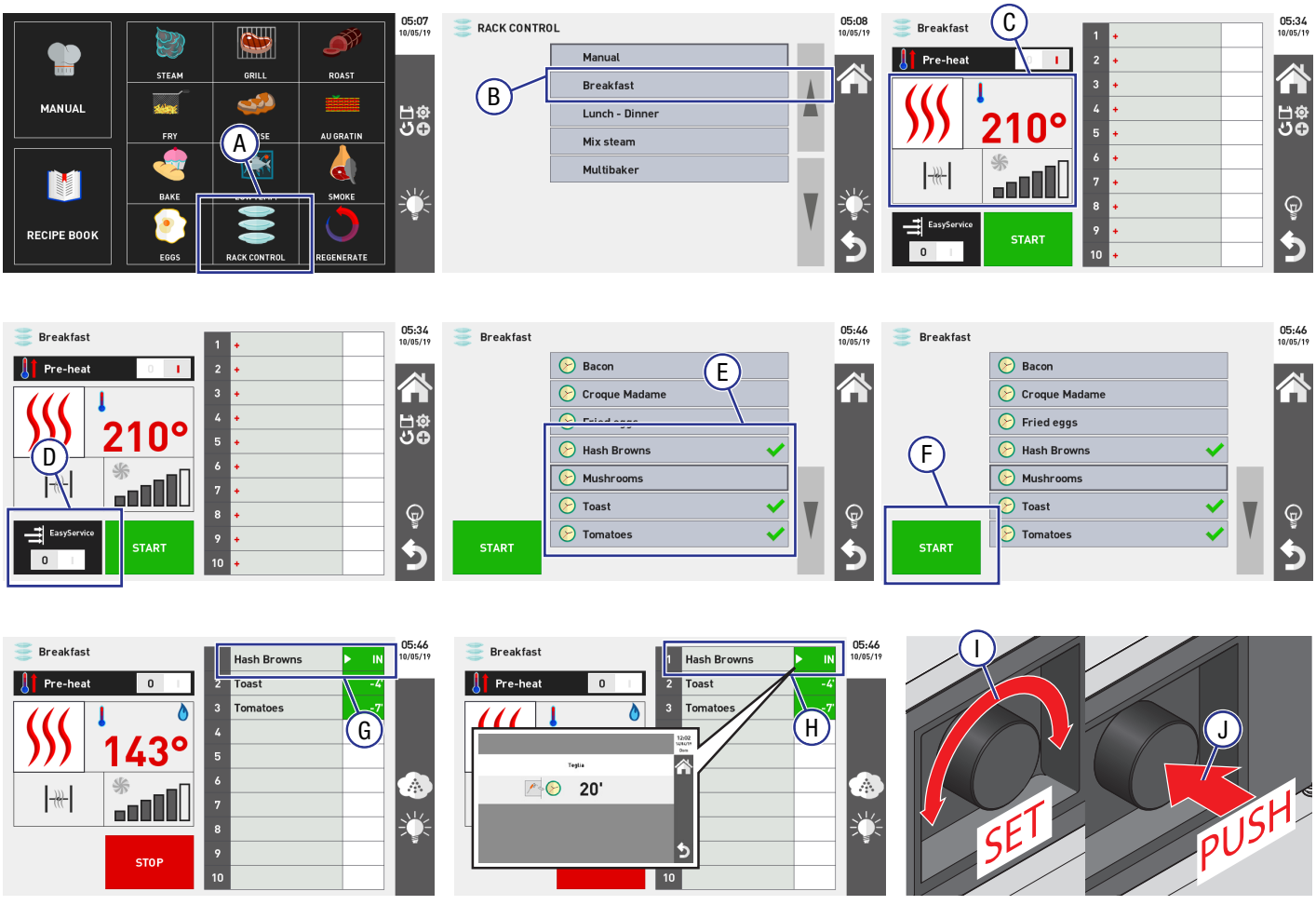

Due to continuous product research and development, the information contained herein is subject to change without notice.

4.6 Special Functions

4.6.1 Cooling Of The Chamber

Before starting a recipe, the chamber can be cooled before cooking foods that require a lower temperatures or before a wash cycle.
No function can be used when the cooling cycle is in progress.
The cooling cycle can be carried out with the door closed or open. It is recommend keeping the door closed until the temperature has dropped.

CAUTION

Hot Steam and Water
Risk of Scalding
Take care when opening oven door during the cooling cycle

To cool the oven chamber:

A. Press “Settings”
B. Select “Cooling”
C. Touch “Start” for the cooling cycle to begin

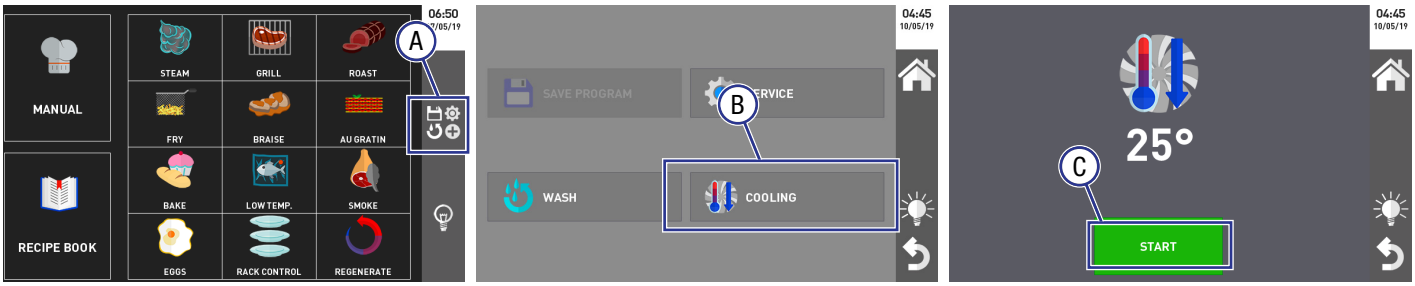

4.6.2 Delayed Start

If required, once a recipe is open, a delayed start time can be set.

A. Select the date and time icon
B. Set the date and time for the delayed start to begin
C. Press “OK” to confirm

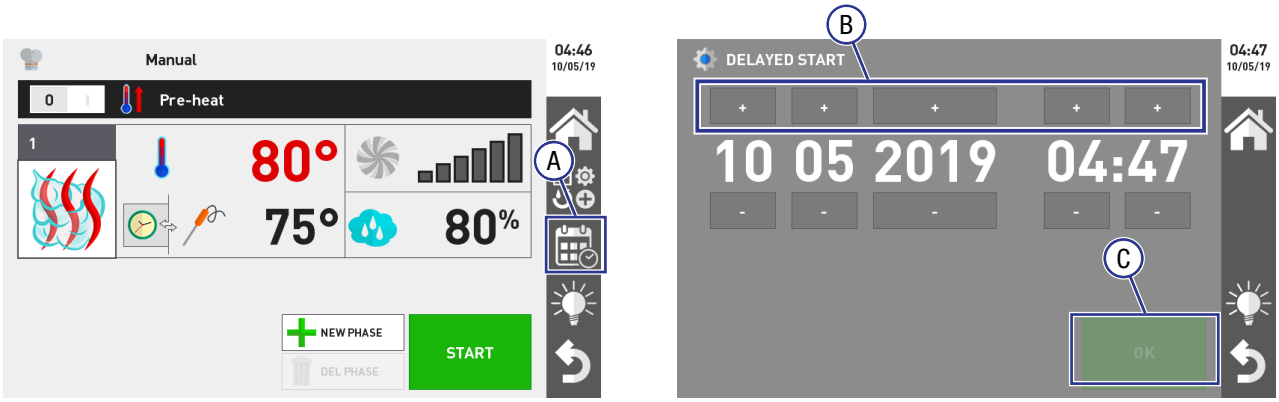

Due to continuous product research and development,
the information contained herein is subject to change without notice.

4.7 Importing / Exporting Recipes and Log To USB

Files can be imported/exported (in FAT32 format) to a USB stick. The USB port is on the front of the oven and is visible when the oven door is open.

Recipes:

- Saved recipes, including altered default recipes can be imported or exported

Logs:

Logs are a list of the events occurred, e.g. wash logs provide information about the type of wash, date and time in which it was carried out.

- HACCP;
- Of the alarms triggered;
- Of the wash cycles carried out.

4.7.1 Import / Export

A. Insert USB into the USB Port
B. Enter the settings menu
C. Touch “Service”
D. Touch “Import / Export”
E. Select one of the options from the Import or Export menu. e.g. “Export Recipe Book”
F. Touch “Start” to begin the file transfer to USB

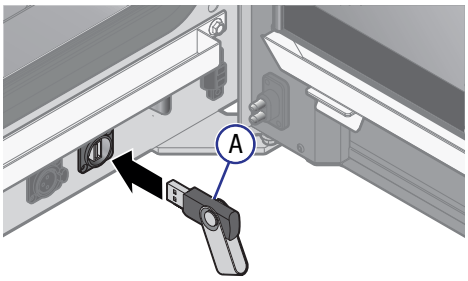

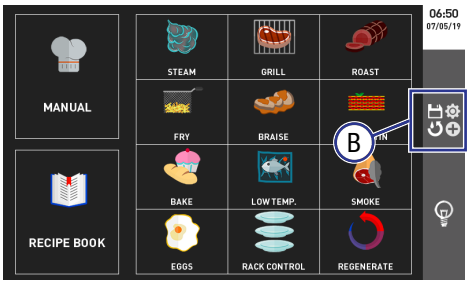

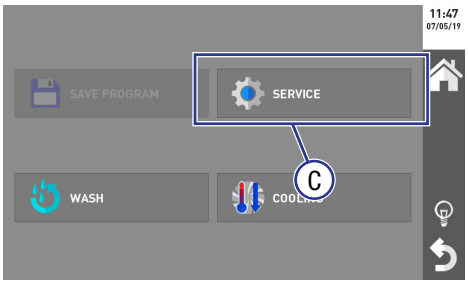

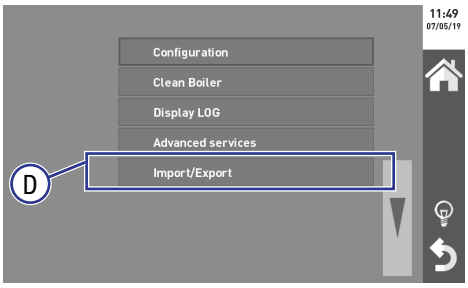

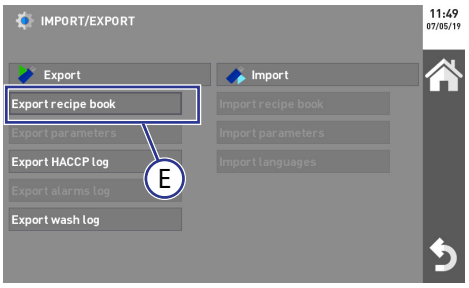

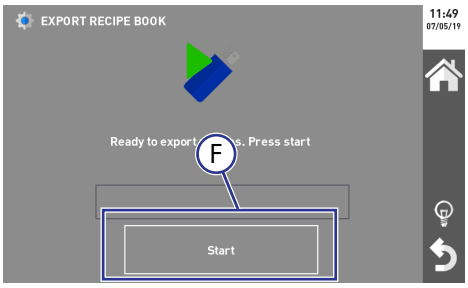

4.8 Display LOG

To display the Logs only:

A. Enter the settings menu
B. Touch “Service”
C. Touch “Display Log”
D. Select “Alarms Log” or “Wash Log”

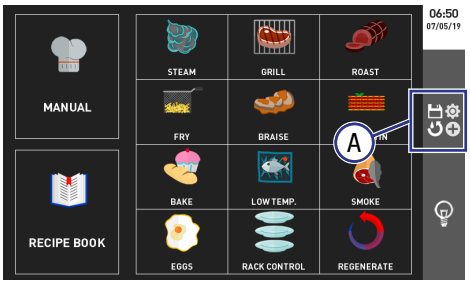

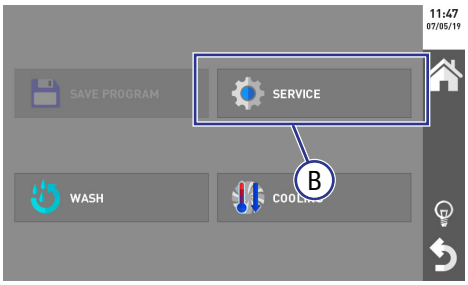

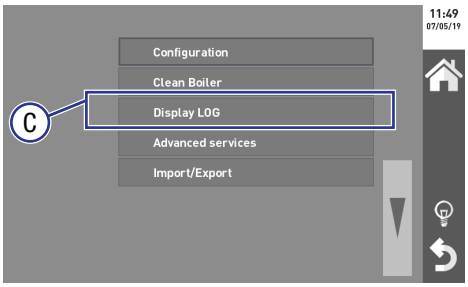

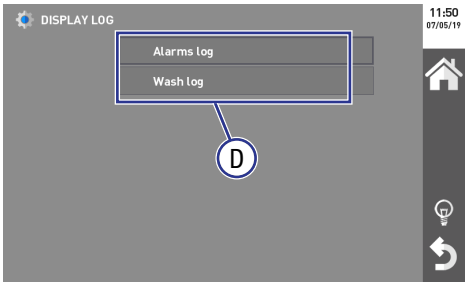

4.9 HACCP Protocol

HACCP (Hazard Analysis and Critical Control Points) is an internationally recognised method of identifying and managing food safety, through the use of preventative procedures that ensures hygiene and health in food.

This protocol begins with the analyses of the possible risks of bacterial, chemical and physical contamination in every stage of the food production process, including storage, distribution and consumption of the finished product.

HACCP identifies the critical points where contamination is more likely to occur. Based on these results, specific procedures are studied and applied to constantly monitor every stage of the food process to prevent hazards.

Due to continuous product research and development,
the information contained herein is subject to change without notice.

5.1 Cleaning

5.1.1 Cleaning and Maintenance Schedule

For good kitchen hygiene, the oven should be visually inspected by management at least once per week. The below 'Cleaning and Maintenance Schedule' provide a cleaning guide for Extreme, Heavy and Light duty operation.
Additionally, a service technician is required to perform the Scheduled Maintenance Services (refer to page 63)

- Daily cleaning is required for the oven, to help maintain and prolong the efficiency of the oven
- The oven should be cleaned at the end of each work day
- DO NOT USE: Wire brushes, steel wool/sponges, scrapers or other abrasive materials
- Wait for the oven chamber to cool down before cleaning. Must be under 100°C

This schedule is a guide only.

Item	Daily	Weekly	1 Month	3 Months	6 Months	12 Months
5.1.6 Cleaning External Surfaces	X					
5.1.7 Cleaning Internal Cavity	X					
5.1.8 Cleaning Glass Door	X					
5.1.9 Cleaning Internal Rack	X					
5.1.10 Inspect Door Seal			X			
5.1.11 Inspect Light Switch			X			
5.1.12 Rinse Head			X			
5.2 Automatic Cleaning	X					
5.3 Boiler Descaling				X		
5.5 Water Filtration				X	X	X

Item	0 hours 1month	2500 hours 12 months	5000 hours 24 months	7500 hours 36 months	10000 hours 48 months
Initial Inspection	X				
Scheduled maintenance service		X			
Scheduled maintenance service			X		
Scheduled maintenance service				X	
Scheduled maintenance service					X

5.1.2 Materials Required

- Stainless Steel Cleaner
- Non Abrasive Cleaning pad
- Clean Sanitised Cloth
- Warm soapy water
- Appropriate PPE (Personal Protective Equipment)

5.1.3 General Information





5.1.4 Corrosion Protection



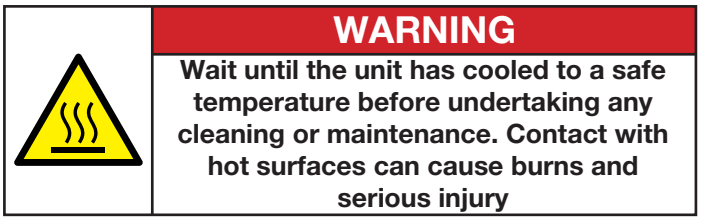

- Cleaning is recommended for health and safety purposes and to prolong the life of the unit
- **DO NOT** use abrasive pads or cleaners on the stainless steel or any other metal parts of the unit
- **DO NOT** use industrial chemical cleaners, flammable cleaners, caustic based cleaners or bleaches and bleaching agents, as many will damage the metals and plastics used on this unit
- **DO NOT** remove any screws and/or panels for cleaning (unless directed)
- This unit is **NOT** waterproof, **DO NOT** hose, **DO NOT** pour water directly onto the unit, **DO NOT** immerse in water

5.1.5 Surface Finish

- Stainless steel exhibits good resistance to corrosion however, if not properly maintained stainless steel can rust and/or corrode
- Any sign of mild rust and/or corrosion should be thoroughly cleaned with warm soapy water and dried as soon as possible
- NEVER use abrasive pads or cleaners for cleaning
- All metal surfaces should be checked while cleaning for damage, scuffs or scrapes as these can lead to rust and further damage to the product
- Mild rust and/or corrosion can be treated with a commercial cleaning agent that contains citric/oxalic/nitric/phosphoric acid.
  Do not use cleaning agents containing corrosive agents. Multi purpose spray and wipe style products must not be used.
  After treatment, wash with warm (not hot) soapy water and dry thoroughly
- Thoroughly wipe the surfaces dry after cleaning. **DO NOT** let water pool on the unit. Check crevices and folds for pooling
- When using, ensure all liquids and moisture is cleaned up straight away.
  Food liquids such as juices from vegetables and fruits should not be left on any surfaces
- **DO NOT** leave items on the stainless steel such as cutting boards, rubber mats and bottles

- To protect the polished surface of the stainless steel, it should be dried using a clean dry soft cloth. A light oil can be applied to enhance the stainless steel surface, using a clean cloth apply the oil in the same direction as grained polished finish
- Some commercial stainless steel cleaners can leave residue or film on the metal; this may trap fine particles of food on the surface, thus deeming the surfaces not food safe

5.1.6 Cleaning External Surfaces

1. The oven exterior should never be cleaned with direct water or high pressure jets
2. Wipe clean using a cloth dampened with clean warm soapy water until all has been removed
3. Scrub any baked on soil with the cleaner pad in the same direction as grained polished finish. **Do not scrub the display panel**
4. Wipe clean using a cloth dampened with clean warm water until all Stainless Cleaner and soil has been removed
5. Using a clean sanitised cloth, thoroughly wipe the stainless steel and metal parts dry. Do NOT let water pool on the unit. Check crevices and folds

Due to continuous product research and development,
the information contained herein is subject to change without notice.

5.1.7 Cleaning Internal Cavity

Before running the automatic cleaning cycle the oven may require large soil/waste to be manually removed

1. Remove any loose soil from the oven cavity and around the drain using a clean damp cloth
2. Remove the drain can cover and dispose of soil. Do not push/force solid waste into the drain. This is to prevent blockages and possible back-flow
3. Re-insert the drain cover

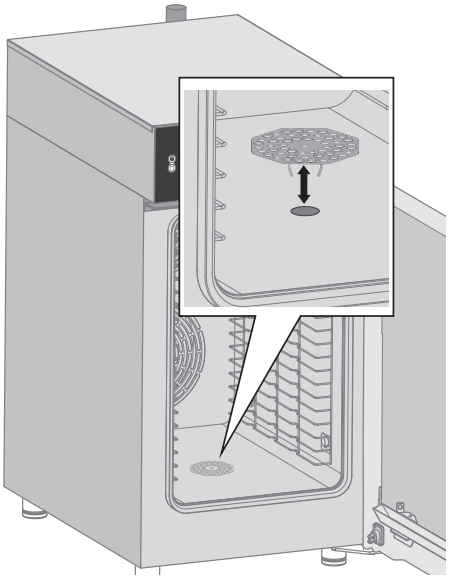

5.1.8 Cleaning Glass Door

The door glass can be cleaned both on the outside and on the inside.

1. Rotate the two latches that lock the internal glass door
2. Swing internal glass door open
3. Clean with warm soapy water and a clean cloth
   Never use abrasive materials
4. Close the glass door, rotate the two latches back into position

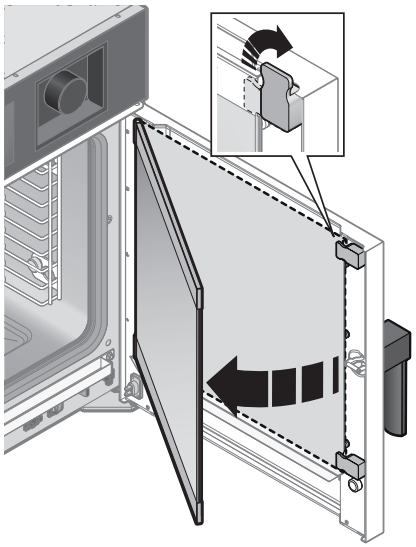

5.1.9 Cleaning Internal Rack

Normally, the automatic wash cycles clean internal racks effectively.
However if required, these can be easily removed.

1. Lift the rack and slide backward, lift away from the mounting screws
2. Clean using warm soapy water, rinse thoroughly and dry
3. Reinstall into the oven

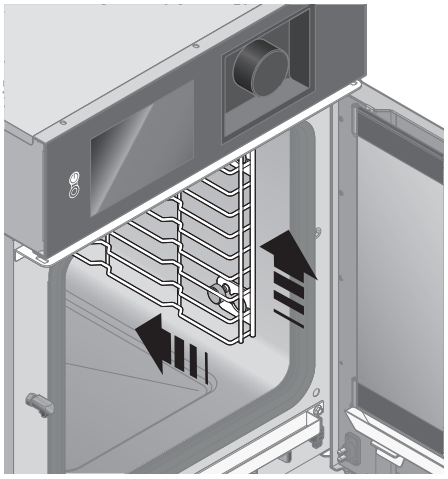

5.1.10 Inspect Door Seal

1. Clean the door gasket with a clean damp cloth
2. Check the door seal for any splits

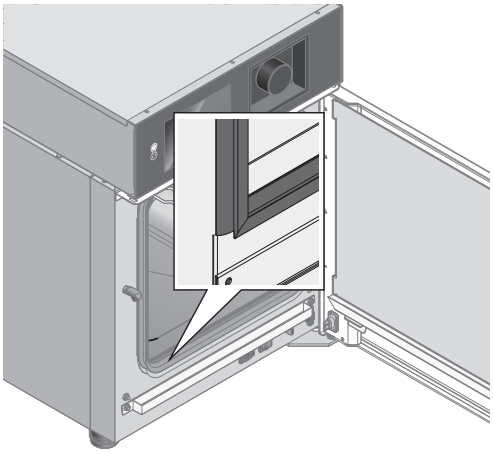

5.1.11 Inspect Light Switch

1. Clean the door light switch with a clean damp cloth, ensure there is no soil on the contact points

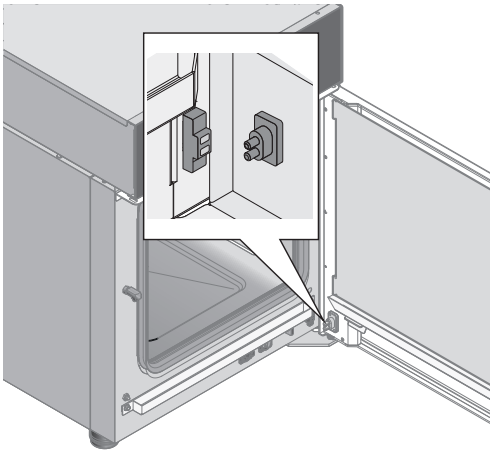

5.1.12 Rinse Head

Periodically remove the rinse head and leave it immersed in a solution of water and vinegar for 4hrs (longer if required). Rinse thoroughly and dry. Re-install rinse head

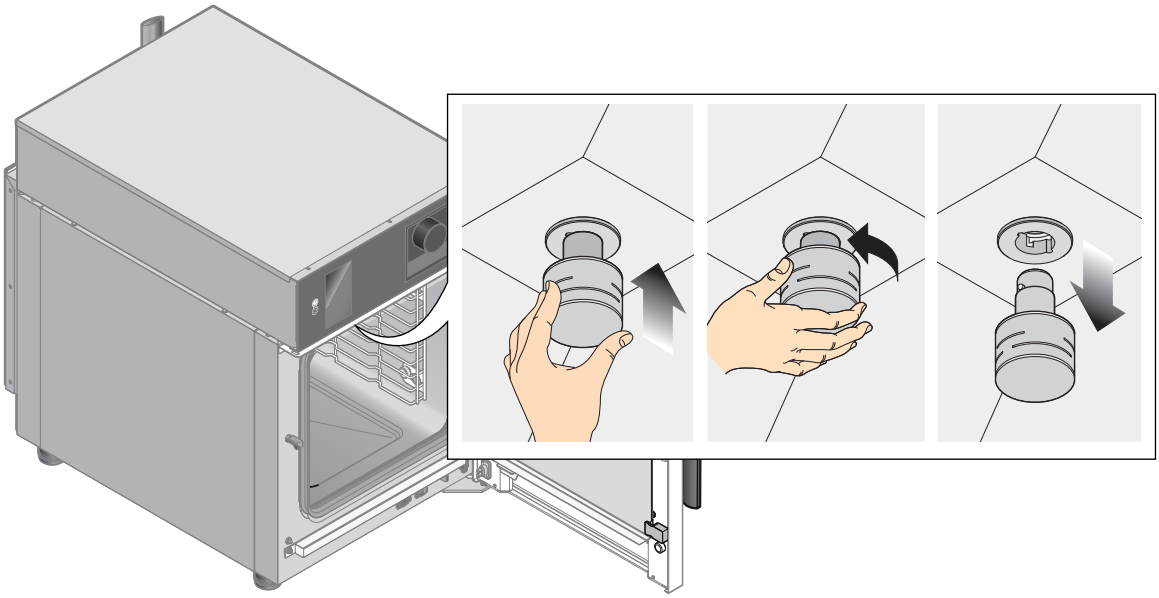

Due to continuous product research and development,
the information contained herein is subject to change without notice.

5.2 Automatic Cleaning

5.2.1 Wash Selection

There are four options when selecting a automatic wash program.

SOFT		55 minutes	light dirt
NORMAL		1 hour and 10 minutes	normal dirt
HARD		1 hour and 10 minutes (wash tablets) 1 hour and 20 minutes (wash using a liquid detergent)	intense dirt
RINSING PROGRAM	The rinse program does not involve the use of detergents but you can decide whether to use the rinse agent or not.		

To select a automatic wash program.

A. Enter the settings menu
B. Touch “Wash”
C. Select appropriate wash program e.g. Hard Wash
D. Select the required detergent (liquid or tablets). If tablets are selected and have not been placed in the oven do so now. Place two tablets directly onto drain cover
E. Select the required rinse agent (white vinegar, organic rinse agent, none)
F. Press “Start”

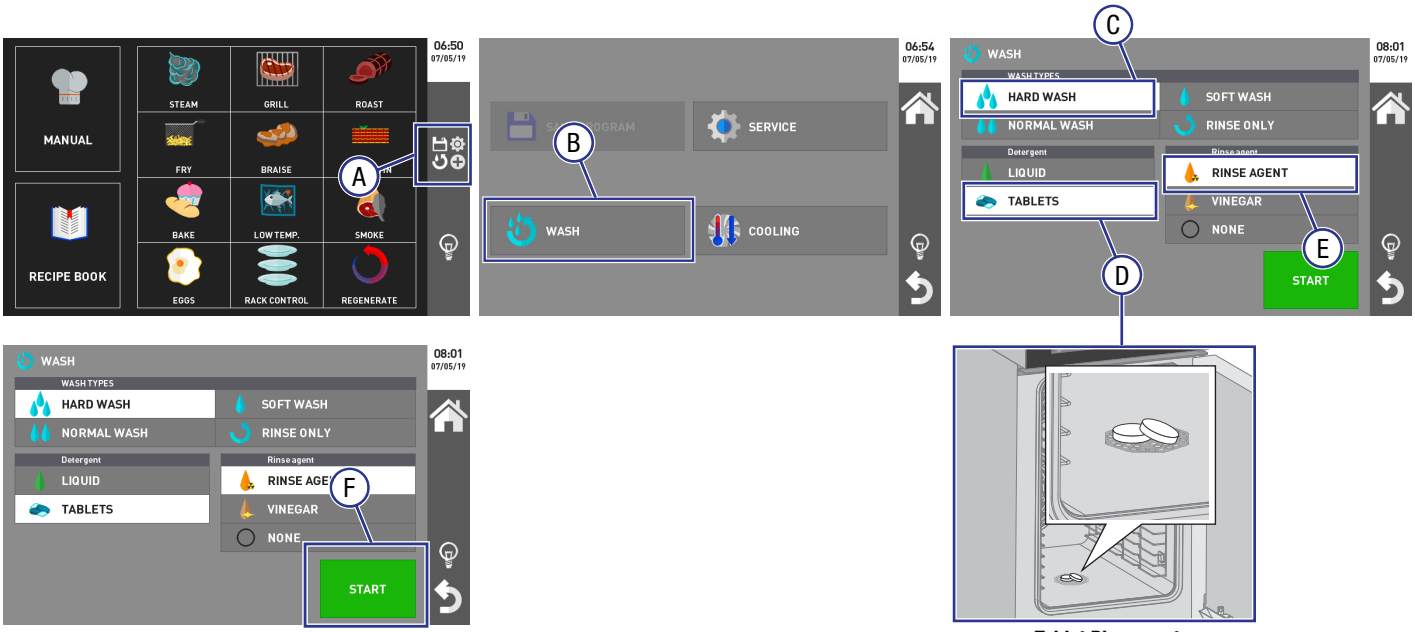

Tablet Placement

Note: Stoddart recommends using the Stoddart supplied tablets or liquid detergent, specific for the Giorik ovens. Use of non-approved or recommended chemical will void warranty.

Note: Stoddart recommends using the Stoddart supplied rinse agent/descaler, specific for the Giorik ovens. The use of white vinegar is allowed but the results on glass surfaces will not be as shiny and transparent.
Using the Stoddart supplied rinse agent/descaler, will allow the boiler’s automatic descaling/cleaning function to be carried out (this operation is carried out simultaneously with the oven’s wash program).

5.2.2 Start the Wash Program

IMPORTANT

During a wash cycle, do not open the oven's door:
Risk of injuries and intoxication due to vapours

Start the wash program by touching "Start"
Depending on the options selected, some windows will prompt the operator to clean the chamber gasket using a soaked cloth, add the tablets or check the level of detergent and rinse agent.

- If the detergent and/or rinse agent tanks need to be replaced, select the relative key:

Both replaced	Both the liquid detergent and rinse agent/descaler tanks have been replaced.
Detergent replaced	The liquid detergent tank has been replaced
Rinse agent replaced	The rinse agent/descaler tank has been replaced

- A window will indicate the progress of the wash program (divided into four stages):

Pre-wash	A "wet" steam phase is carried out without using a detergent to soften coarse residue.
Wash	The wash cycle using a detergent
Rinse	Rinsing of the chamber (three cycles + one using rinse agent, where applicable) to remove any trace of detergent.
Drying	Air drying the oven chamber.

Note: If regularly cooking with fatty foods (e.g. pork roast, roasts, etc.), between one cooking cycle and another, it is recommend to start the rinse program to facilitate the final cleaning procedure and ensure the utmost hygiene.

5.2.3 Stop the Wash Program

In certain circumstances the wash cycle may need to be stopped.
The wash cycle can only be stopped at certain stages:

Pre-wash	**STOP ALLOWED** Press "Stop". If tablets were used, a pop-up displays asking for the removal of the tablets, together with any residue.
Wash	**STOP ALLOWED** Press "Stop". The oven automatically switches to a rinse phase, which cannot be stopped.
Rinse	**STOP NOT ALLOWED**
Drying	**STOP ALLOWED** Press "Stop". The wash cycle stops immediately

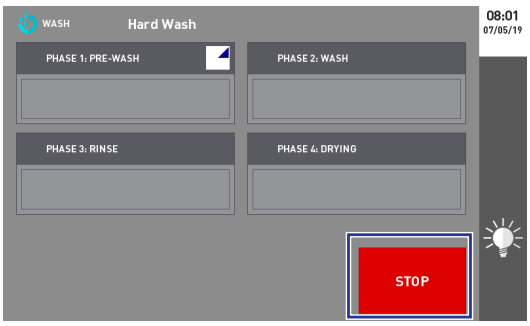

Note: If during a wash cycle the power to the oven is disconnected (e.g. power outage, turned off at supply) for a period less than two minutes, the oven will automatically resume the wash cycle when the power is restored.

If during a wash cycle the power to the oven is disconnected (e.g. power outage, turned off at supply) for a period longer than two minutes, when the power is restored, a message will be displayed about the power outage and a audible sound is emitted. A rinse will automatically start this cannot be stopped (If tablets were used, a pop-up displays asking for the removal of the tablets, together with any residue).

Due to continuous product research and development,
the information contained herein is subject to change without notice.

5.3 Boiler Descaling

5.3.1 Automatic

Ovens equipped with high performance boilers should be de-scaled periodically to keep the boiler efficient and reduce the risk of damage. The oven will automatically calculate when descaling needs to be carried out, a notification will display to give the option to start this function.

A. When the warning pop-up appears, press either yes or no:
   - YES: to start the descaling process
   - NO: to postpone the descaling process
B. Select the Rinse Agent or Vinegar
C. Touch “Start”

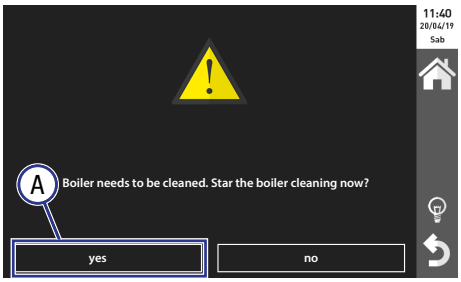

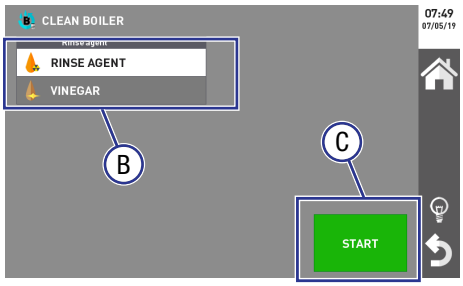

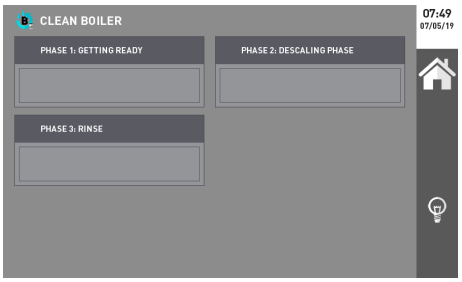

Note: A display window indicates the progress of the operation, which occurs in three steps: Getting Ready, Descaling phase and Rinse.

5.3.2 Manual

To select Boiler Descaling:

A. Enter the settings menu
B. Touch “Service”
C. Touch “Clean Boiler”
D. Select the required rinse agent (Rinse Agent or Vinegar)
E. Touch “Start”

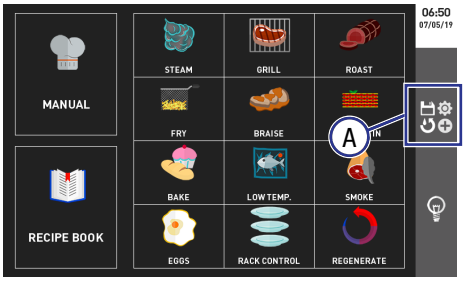

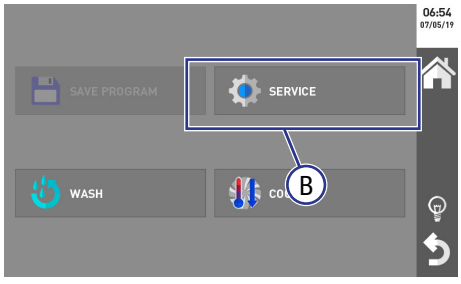

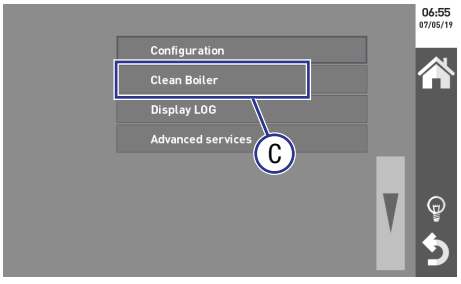

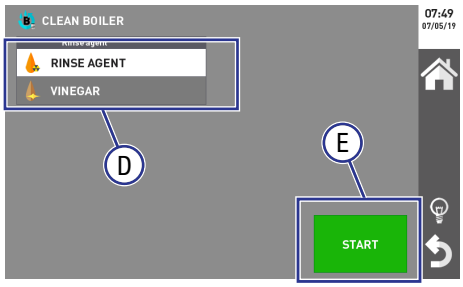

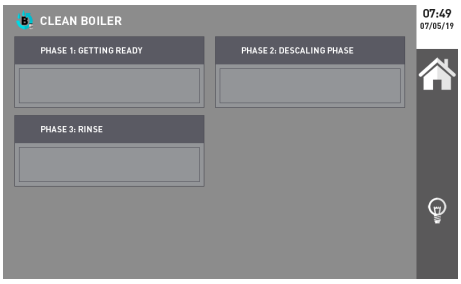

Note: A display window indicates the progress of the operation, which occurs in three steps: Getting Ready, Descaling phase and Rinse.

5.4 Liquid Detergent / Rinse Agent Connection

IMPORTANT

Stoddart's preferred detergent method is Tablets.
Only Stoddart provided oven cleaners should be used.
Other products may lead to voidance of warranty!

Detergent and Rinse Agent lines are located on the underside of the oven.
When facing the oven:

Detergent Line - Left hand side
Rinse Aid Line - Right hand side

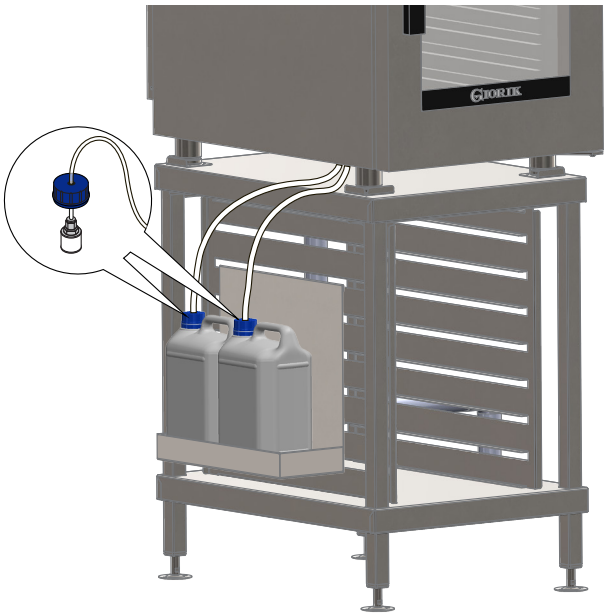

- When tablets are to be used, roll the detergent line up and use zip-ties to secure
- Remove the bottle caps from both descaler and detergent
- Drill a 8mm hole in the centre of each cap
- Feed the detergent line and the rinse agent hose through the bottle caps
- Attach the weights to each line
- Place both lines and weight back into the bottles and secure bottle caps (ensure to place correct line in the correct chemical

Note: The Stoddart supplied rinse agent is also used as the descaler

Note: The Stoddart supplied rinse agent or vinegar can be used. Vinegar will not aid the cleaning process as well as the rinse agent.

Rinse Head

Periodically remove the rinse head and leave it immersed in a solution of water and vinegar for 4hrs (longer if required). Rinse thoroughly and dry. Re-install rinse head

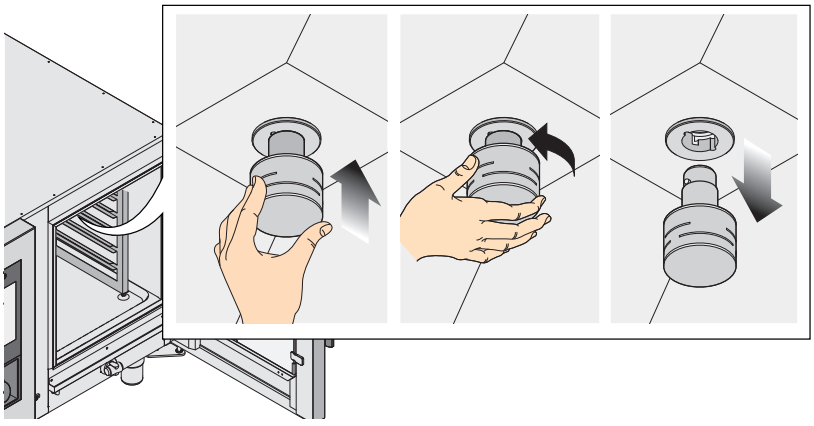

5.5 Water Filtration

- Water filtration is critical to the performance of the oven. Users must establish a regular filter replacement schedule. Required frequency will depend on the water quality and type of filtration system
- Filter change frequencies below are indicative minimums. If water quality is poor, the filter may need to be replaced more frequently
- Indicators that filters may require changing are:
  - Surface corrosion present in the oven cavity. Contact Stoddart for advice
  - Scale building up more frequently than normal
  - Oven starving for water creating error messages

Due to continuous product research and development,
the information contained herein is subject to change without notice.

5.6 Troubleshooting

5.6.1 Common Problems

In the event of severe failure, it is essential to turn isolate the unit from the power supply and close the water shut-off valve.

PROBLEM	POSSIBLE SOLUTION
The oven does not start.	Check that the power supply is turned on
	Make sure the oven door is properly closed
	Make sure the parameters of the cooking cycle have been set correctly
	Make sure the oven does not have any error messages displayed
	If the problem persists, Contact the Stoddart service department
The fans stops during operation.	Turn off the oven and wait for the thermal breaker of the motor to be restored automatically
	Make sure the cooling vents are not obstructed
	If the problem persists, Contact the Stoddart service department
Internal lighting is not working	Contact the Stoddart service department
Water is not delivered from humidifier pipes	Check that the water shut-off valve is open
	If the problem persists, Contact the Stoddart service department

5.6.2 Door Micro Switch

The door micro-switch is the device which stops the cooking cycle of the oven when the door is opened. Once the door is closed, the regular cycle is resumed. Do not operate this device manually with the oven door open.

5.6.3 Motor Thermal Breaker

The fan motor is equipped with a built-in thermal protection which stops operation in case of overheating. The motor restarts automatically as soon as its temperature is lowered, returning within the safety range.

5.6.4 Safety Thermostat Of The Oven Chamber

If the temperature in the oven chamber reaches 350°C, the thermostat disconnects the power supply to the heating elements of the oven. This safety device can be reset only by a qualified support service technician because it requires further checks.

5.6.5 Technical Problems / Alarm Code



WARNING

Technician tasks are only to be completed by qualified service people. Check faults before calling service technician.

ALARM		DESCRIPTION	ACTION	SOLUTIONS
E01	Chamber probe failure	Cooking chamber temperature detection probe failure	Cooking stopped.	Contact the Stoddart service department
E03	Inverter alarm	Motor control board alarm.	Cooking stopped.	Contact the Stoddart service department and communicate the displayed error (e.g. “inverter alarm code 8”)
E05	Fan safety	Oven motor thermal safety alarm (higher if 2)	Cooking stopped. Automatic reset	Contact the Stoddart service department
E06	Chamber safety	Oven cooking chamber over-temperature thermal safety alarm	Cooking stopped. Manual reset by user	Remove the black screw cap located at on the back of the oven at the top, press the button, replace screw cap

Due to continuous product research and development, the information contained herein is subject to change without notice.

E09	PWM Communication	Communication error with PWM burner control board	Cooking stopped. Manual reset	Contact the Stoddart service department
E11	Fan 2 safety	Lower oven motor thermal safety alarm	Cooking stopped. Automatic reset	Contact the Stoddart service department
E12	No gas alarm	Failed activation and/or detection of the burner flame	Cooking stopped. Manual reset	Check the gas valve, shut-off valve, and the hood with gas safety device. Reset the alarm by pressing the navigation dial for 1 second. If the problem persists, Contact the Stoddart service department
E14	Electronic board temperature alarm	Service compartment temperature too high	Cooking stopped.	Check oven's ventilation is not blocked Check cooling fans are functioning correctly Open the oven door and stop the cooking cycle. Do not disconnect the oven's external power supply. Contact the Stoddart service department
E15	Electronic board temperature pre-alarm	Service compartment temperature too high	Cooking stopped. Manual reset	If the problem persists, Contact the Stoddart service department
E16	No communication with the base	Serial communication problems between the touch board and the base board	Cooking stopped.	Switch the appliance off and on again. If the problem persists, Contact the Stoddart service department
E17	Core probe failure	Core probe detection problems	Cooking stopped. Automatic reset	Make sure you have inserted the core probe into the connector. If the problem persists: Contact the Stoddart service department
E19	Probe 4 failure	Humidity control system probe 4 failure	Cooking stopped at combi/steam	Use the oven in convection mode
E20	Probe 5 failure	Humidity control system probe 5 failure	Cooking stopped at combi/steam	Contact the Stoddart service department
E21	No water	No water for the production of steam alarm	Cooking stopped at combi/steam	Check the water valve. Press the navigation dial to reset the alarm. If the problem persists: Contact the Stoddart service department
E22	No power.	No external power supply	Cooking stopped. Manual reset	Press the navigation dial to reset the alarm. Check if a power outage occurred. If the problem persists: Contact the Stoddart service department
E23	Boiler drain not completed	The boiler does not drain properly	Cooking stopped. Automatic reset	Contact the Stoddart service department
E24	Flow-meter failure	No wash water alarm	Wash block. Manual reset	Check the water valve. Press the navigation dial to reset the alarm. If the problem persists: Contact the Stoddart service department
E25	Descaling process interrupted due to cleaning product loading failure	Problems with loading the boiler cleaning product	Boiler wash block. Manual reset	Make sure that the rinse agent/descaler loading tube is properly inserted in the tank and that the latter is full. If the problem persists: Contact the Stoddart service department
E04	Air Flow Alarm	Pressure switch problem burner air safety	Cooking stopped. Manual reset	Check that the flue gas outlet duct is free. Press the navigation dial to reset. If the problem persists, contact the Stoddart service department
E07	PWM	Problem with burner fan speed control system	Cooking stopped. Manual reset	Press the navigation dial to reset; Remove and restore external power to the oven. If the problem persists, contact the Stoddart service department
E09	PWM Communication	Problem with digital communication with burner fan speed control board	Cooking stopped. Manual reset	Press the navigation dial to reset; Remove and restore external power to the oven. If the problem persists, contact the Stoddart service department
E12	'No gas' alarm	Failed start-up and/or burner flame detection	Cooking stopped. Manual reset	Press manual restore. (Navigation Dial for 1 second) If the problem persists, contact the Stoddart service department

Due to continuous product research and development,
the information contained herein is subject to change without notice.

5.7 Scheduled Maintenance Service History

To ensure the continued performance and reliability of this oven, routine maintenance and servicing are required at specific time intervals. Contact the Stoddart Service Department to book a service.

Australia
Email: service@stoddart.com.au
Tel: 1300 307 289

New Zealand
Email: service@stoddart.co.nz
Tel: 0800 935 714

5.7.1 Service Log

Initial Inspection

0 - 1month

Date: .....

Hours: .....

Technician: .....

Scheduled maintenance service

2500 hours / 12 months (whichever occurs first)

Date: .....

Hours: .....

Technician: .....

Scheduled maintenance service

5000 hours / 24 months (whichever occurs first)

Date: .....

Hours: .....

Technician: .....

Scheduled maintenance service

7500 hours / 36 months (whichever occurs first)

Date: .....

Hours: .....

Technician: .....

Scheduled maintenance service

10000 hours / 48 months (whichever occurs first)

Date: .....

Hours: .....

Technician: .....

Due to continuous product research and development, the information contained herein is subject to change without notice.

5.8 Accessories and Consumables

Contact the Stoddart Spare Parts department to place an order.

Australia
Email: spares@stoddart.com.au
Tel: 1300 307 289

New Zealand
Email: spares@stoddart.co.nz
Tel: 0800 935 714

Code	Description
SPGI.7080536	Giorik Cleaning Tablets – Container of 99 Tablets
SPGI.7080533	Giorik Liquid Descaler and Rinse Aid - 2 x 5 Litre
CNCL.0105	Combi Foam Oven Cleaner - 3 x 5 Litre (liquid chemical)
SPGI.SMK01	Digital Smoker
SPGI.6000129	Sous Vide Probe
SPGI.CBH.002	Wall Mount Bracket (liquid chemical)
SPGI.CBH.001	Side Stand mounting (liquid chemical)

SDS sheets will be provided with each delivery.

Online Order

Due to continuous product research and development,
the information contained herein is subject to change without notice.

Due to continuous product research and development,
the information contained herein is subject to change without notice.

GIORIK
INNOVATIVE COOKING EQUIPMENT SINCE 1963

Australia

Australian Business Number: 16009690251

Service / Spare Parts

https://customerservice.stoddart.com.au

Sales

Tel: 1300 79 1954

Email: sales@stoddart.com.au

Web: www.stoddart.com.au

Customer Service Portal

New Zealand

New Zealand Business Number: 6837694

Service / Spare Parts

https://customerservice.stoddart.com.au

Sales

Tel: 0800 79 1954

Email: sales@stoddart.co.nz

Web: www.stoddart.co.nz

Customer Service Portal

STODDART®

innovative solutions