WARRANTY 3 YEARS PARTS & LABOUR

NATIONWIDE 24/7 SERVICE 365 DAYS

Turbo air

REFRIGERATOR

UNDER COUNTER GLASS DOOR

MODEL : KGR24-4-N / KGR24-4(HC)

FEATURES / BENEFITS

NATURAL Refrigerant **Front Breathing**

Digital temperature control & monitor system

Keep foodproducts safe by maintainingconstanttemperatures.External digital display allows for easy monitoring.

Hydrocarbon(HC) refrigerants (R-290)

With innovative and eco-friendly technology, Turbo Air brings you hydrocarbon refrigerators designed to meet DOE's Energy conservation Standards in 2017 and to use EPA's SNAP Program approved HC refrigerants. Hydrocarbon refrigerants do not deplete the ozone layer and have very low affect to global warming (ODP-0, GWP-3).



Side mount compressor unit

With compressors positioned on the side of the unit, our refrigerators can now be serviced without being moved. Our innovative, front breathing feature also allows this model to be highly efficient in narrow spaces.

Exterior & interior of the cabinet

The Turbo Air Ks-eries boastsa stainlesssteelexterior (galvanized steel back and bottom). Interior is stainless steel floor with AL sides, back and AL door liners. It guarantees the utmost in cleanliness and long product life. The K- series adds a touch of styled the most refined setting.

High-density polyurethane insulation

Theentire cabinet structure and solid doorsare in-place using high density, CFC free polyurethane insulation.

Hot gas condensate system

Through Turbo Air's creative innovation,the condensate system surfaces have been specially treated to resist corrosion. This not only increases efficiency without the risk of refrigerant leakage from corrosion, but also thoroughly prevents theoverflowof condensatewater.

Ergonomically designed doors

Customers'fatigue fades awaywitheasy griphandles and doors that open effortlessly. These features along with self-closing doors make this the ultimatechoicein customerconvenience.

Adjustable, heavy duty, PE (polyethylene) coated wire shelves

Easy open front grille with condenser cleaning brush kit

Frontgrille cover is easily removable without any tools, which makes condenser cleaning easy and convenient at any time. Handy condenser cleaningbrushis included insidethe front grille cover.

Refrigerator holds 1°C ~ 8°C for the best in food preservation

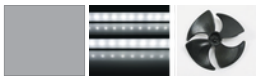

LED interior lighting & fan control (only at Turbo Air)

Energy efficient LEDlighting lights every corner, making items easy to find. Fan control function automatically shuts off the fan when the door is open, which prevents hot air from being drawn in, thus maintaining the cool inner temperature.

Standard features

- Anti-corrosion coatedevaporator
- Self-contained system
- Standard 125mm. swivel castors with locks on the front set
- Door locks standard

Optional features

- 125mm castors fitted
- 180mm,105mm, 80mm castors optional
- Adjustable legs 100-155mm

REFRIGERATOR

UNDER COUNTER GLASS DOOR

MODEL : KGR24-4-N / KGR24-4(HC)

Model	KGR24-4-N(HC)
Refrigerant	R-290
POWER INPUT(W)	450
COMP (HP)	1/2HP
Energy consumption KW/24H	5.1
AMPS(A)	2.5
Capacity (ℓ)	705
Product Dimension W (mm)	2400
Product Dimension D (mm)	700
Product Dimension H (mm)	860
Weight (Kg)	195
Stainless steel	SUS 439
Applied castors	125mm
Max GN Pan depth	N/A
GN Pan	N/A
Door lock	yes
Adjustable Shelves	4
LED light	Yes
Temperature range	1°C~8°C
Ambient temperature	35°C
Drainage / Forced Evaporation Type	Sop paper
Temperature control type	Digital control
Cooling type	FAN COOLING
Glass Type (Low-e / Heater / How many layer of the glass)	Low-e /Heater
Features	Easy filter cover Energy efficient

Design and specifications subject to change without notice.
Actual Shipping weight may differ due to
extra packing materials for product protection.

PLAN VIEW

(unit : mm)

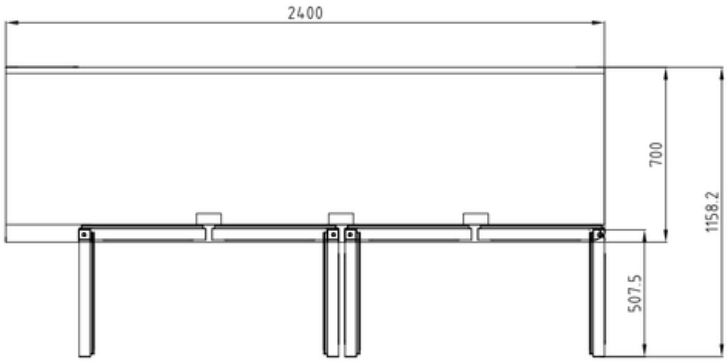

TOP VIEW

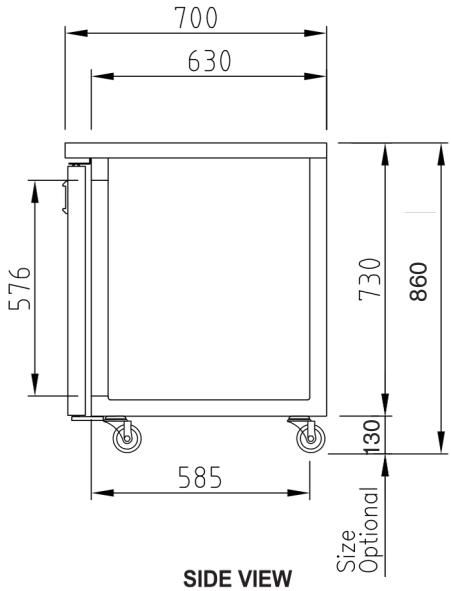

SIDE VIEW

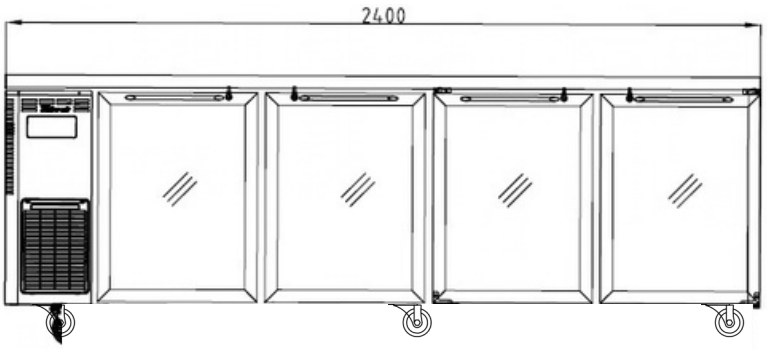

FRONT VIEW

WARRANTY 3 YEARS PARTS & LABOUR

NATIONWIDE 24/7 SERVICE 365 DAYS

Turbo air

AUSTRALIA BRANCH

TURBO AIR PTY LTD
www.turboairinc.com.au
1st Floor, Building E
10 Highgate St, Auburn
NSW 2144 Australia
T.02 9737 9881