turbofan®

EHSERIES
EXTENDED HOLDING

EHTC10-L

Technical data sheet for

EHTC10-L HUMIDIFIED HOLDING CABINET

10 Tray Electric Humidified Holding Cabinet
7″ TOUCH SCREEN CONTROL



EHTC10-L

Unit shall be a Moffat electrically heated Turbofan Humidified Holding Cabinet. NSF4 listed. The holding cabinet shall have double skin construction with stainless steel interior and exterior sides, front and top. Door shall be side hinged. Unit shall have capacity for 10 1/1GN pans. A single speed fan shall gently and evenly circulate air around the cabinet. Cabinet shall be controlled by a 7″ Touch Screen control with individual shelf timers and cabinet temperature control and humitity level control. Holding cabinet shall be mounted on castors, with two rigid castors at rear and two castors, swivel and wheel lock at front. Holding Cabinet shall operate independently or in conjunction with Moffat Turbofan E33T Convection Oven. Holding Cabinet shall be fitted with a 10A cordset.

STANDARD FEATURES

- Designed for individual use or system installed with Turbofan E33T Convection Ovens
- 10 1/1GN pan capacity
- 74mm tray spacing
- Compact 610mm width
- Full viewing field reversible door
- 220-240V 10A plug-in cordset fitted
- 1600W cabinet heating
- Full double skin construction
- 7″ Capacitive Touch Screen Control
- High resolution display
- WiFi / Bluetooth / USB capable
- Diagnostics / Service modes
- Individual shelf timers
- Electronic temperature control
- 600W heated humidification water tank
- Electronic humidity tank temperature control
- Autofill water tank system
- Continuous door seal
- Low velocity circulation fan system
- Dual LED halogen cabinet interior lamps
- 4 dia. 76mm castors with 2 front castors with wheel and swivel lock, 2 rigid rear castors
- 100% recyclable packaging

ACCESSORIES - INCLUDED

- Two 145mm rear standoffs included
- 3M Cuno water filter kit complete with cartridge and connection fittings

ACCESSORIES - OPTIONAL

- 1/1 GN non-stick wire baskets
- Turbofan SKEHTC10 Holding Cabinet stand
- 237472 Stacking Kit E33 Oven - EHTC10 Cabinet

MOFFAT®

turbofan®

EHSERIES
EXTENDED HOLDING

EHTC10-L

EHTC10-L 1/1 GN Electric Humidified Holding Cabinet Touch Control 7˝ TOUCH SCREEN CONTROL

CONSTRUCTION
304 stainless steel interior cabinet
Stainless steel front, sides and top exterior
Stainless steel interior side racks
Stainless steel frame, side hinged door
5mm thick door glass
Stainless steel control panel
Stainless steel base and rear panels

CONTROLS
7˝ capacitive touch screen
Icon driven program menu
WiFi / Bluetooth / USB connectivity
Temperature range 20- 90˚C
Humidity temp control

CLEANING
Stainless steel top and side exterior panels
Removable plug-in door seal (no tools required)

SPECIFICATIONS

Electrical Requirements
220-240V, 50-60hz, 1-phase, 2.3kW, 9.6A
10A cordset fitted

Water Requirements
Cold water connection ¾” BSP male
80psi / 550kpa maximum inlet pressure
22psi / 150kpa minimum inlet pressure

Water Quality

Properties	
Total hardness	60 - 90 ppm
pH	6.5 - 8.5
Cl-(chloride)	max. 60 mg/l
Cl2 (free chlorine)	max. 0.2 mg/l
$SO4^{2-}$ (sulphate)	max. 150 mg/l
Fe (iron)	max. 0.1 mg/l
Total Dissolved Solids (TDS)	50 - 150 ppm
Temperature	max. 40˚C

External Dimensions
Width 610mm
Height 1015mm including dia. 76mm castors
Depth 680mm
825mm including Rear Standoffs

Nett Weight
188kg

Packing Data
122kg
0.71m3
Width 700mm
Height 1170mm
Depth 865mm

INSTALLATION CLEARANCES
Rear 145mm including Rear Standoffs
LH Side 0mm
RH Side 25mm

CLEARANCE FROM SOURCES OF HEAT
A minimum distance of 300mm from the appliance sides is required

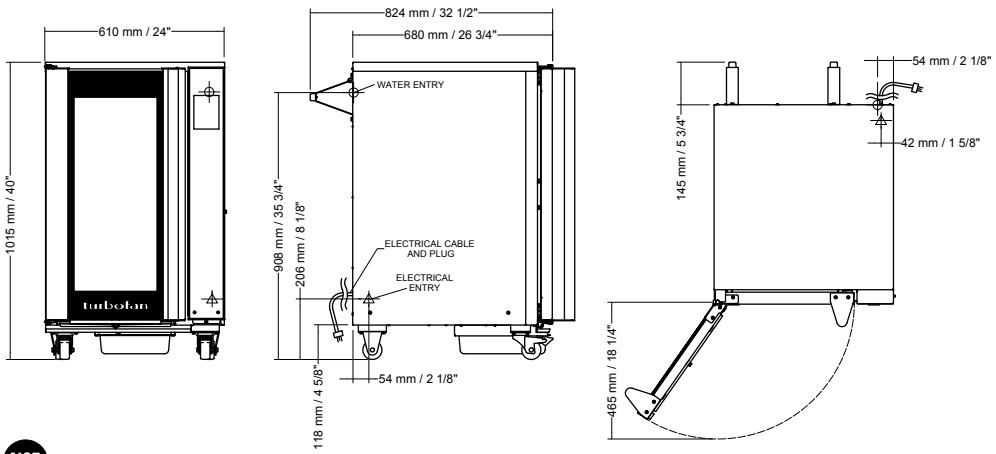

NSF

MOFFAT®

Australia
www.moffat.com.au
New Zealand
www.moffat.co.nz
www.turbofanoven.com

Australia
Moffat Pty Limited
Victoria/Tasmania
740 Springvale Road
Mulgrave, Victoria 3170
Telephone +61 3-9518 3888
Facsimile +61 3-9518 3833
vsales@moffat.com.au

New South Wales
Telephone +61 2-8833 4111
nswsales@moffat.com.au

South Australia
Telephone +61 3-9518 3888
vsales@moffat.com.au

Queensland
Telephone +61 7-3630 8600
qldsales@moffat.com.au

Western Australia
Telephone +61 8-9413 2400
wasales@moffat.com.au

New Zealand
Moffat Limited
Christchurch
45 Illinois Drive
Izone Business Hub
Rolleston 7675
Telephone +64 3-983 6600
Facsimile +64 3-983 6660
sales@moffat.co.nz

Auckland
Telephone +64 9-574 3150
sales@moffat.co.nz

24:7 Service Support

ISO9001 Quality Management Standard

Designed and manufactured by MOFFAT®

ISO9001
All Turbofan products are designed and manufactured by Moffat using the internationally recognised ISO9001 quality management system, covering design, manufacture and final inspection, ensuring consistent high quality at all times.

In line with policy to continually develop and improve its products, Moffat Limited reserves the right to change specifications and design without notice.

© Copyright Moffat Ltd

AN.TFN.S.2501