VULCANO 40 + 40

DOUBLE DECK BENCHTOP ELECTRIC OVEN WITH STONE BASE

4PC0603

ZANOLLI VULCANO SERIES BENCHTOP ELECTRIC DECK OVEN

Compact, Powerful and designed to fit on any benchtop, introducing the Valcano by Zanolli. Constructed in stainless steel with durable and simple electromechanical controls, these ovens are engineered for easy maintenance and a long life. Based on your specialization, you can cook not only different kinds of pizza but also a wide range of gastronomy dishes made possible by the accurate and adjustable independent control of the top and bottom elements.

MAIN CHARACTERISTICS

- Armoured stainless steel heating elements, optimized to compensate for heat loss due to door opening
- Thick heat absorbent refractory ceramic oven floor
- Made entirely of stainless steel
- Simple gravity springless door with viewing window
- Electromechanical Control panel.
- Independent top and bottom element control of each chamber, adjustable independently.

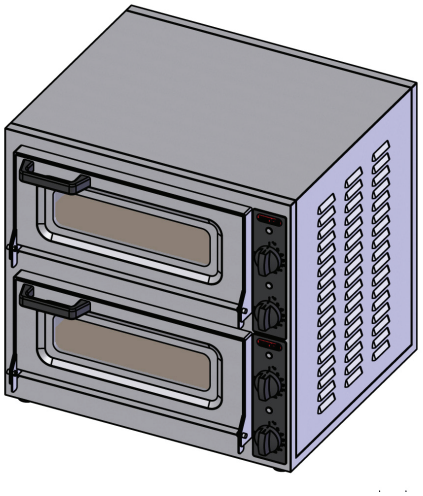

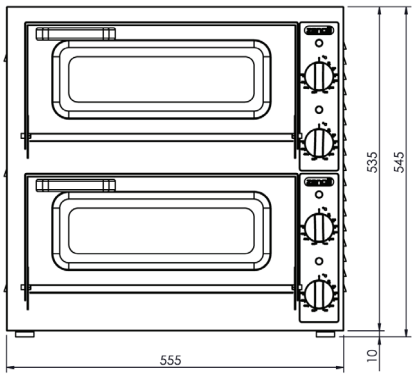

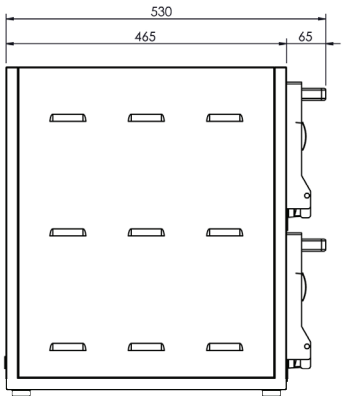

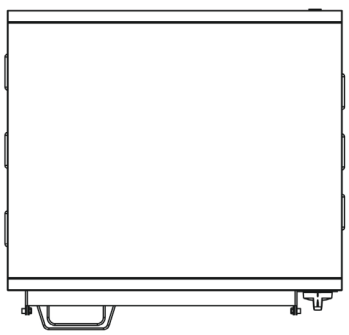

SPECIFICATIONS

Voltage / Electrical Supply (three phase)	three -phase 400Vac 3N 50Hz, supplied with no plug, lead only
Current	3.17 amps at 400Vac 3-N 50Hz
Voltage / Electrical Supply (single phase)	single -phase 230Vac 1-N 50Hz, supplied with lead only rated for a 20 amp plug.
Current	19.2 amps at 230Vac1-N 50Hz
Total power	4.4 kw
Average Power	2.2kw
Max temp	500 °C
Chambers	2
Power control	separate for oven roof and bedplate
Weight	46 kg
Ambient Temperature	0-40 °C
Maximum humidity	95% without condensation
Warranty	4 year parts 2 years Labour

DIMENSIONS

External dimensions WxDxH (mm)	555 X 460 X 535
Internal dimensions (standard refractory) WxDxH (mm)	405 X 405 X 110