TAE61SH
BAKERY COMBI / PASTRY DECK COMBINATIONS

Main Features

HOOD
Exhaust Hood with Optional 400 or 600 mc3 Suction capacity.

BAKING CHAMBER
- 6 Trays Capacity (600 x 400)
- Large 80mm Tray Spacing
- Self cleaning
- Weekly Auto Start Up
- 147 Baking Programs
- 2 speed fan regulation
- Bi-directional reversing fan system
- Halogen light
- Convection Cooking
- Combination Cooking
- Steam Cooking
- Probe Cooking
- Touch Panel User Control
- Automatic Preheat
- 6 Cooking Cycles for each Program
- Digital Steam Exhaust Regulation
- Water injection regulation

DECK OVENS
- 1 x Teorema Polis Pastry Deck Ovens accommodating 2 x (600 x 400) Trays
- Stone / or steel base options
- Optional steam Boiler

STAND
- Heavy Duty Stand with Lockable Castors
- Optional Bakery Rack under

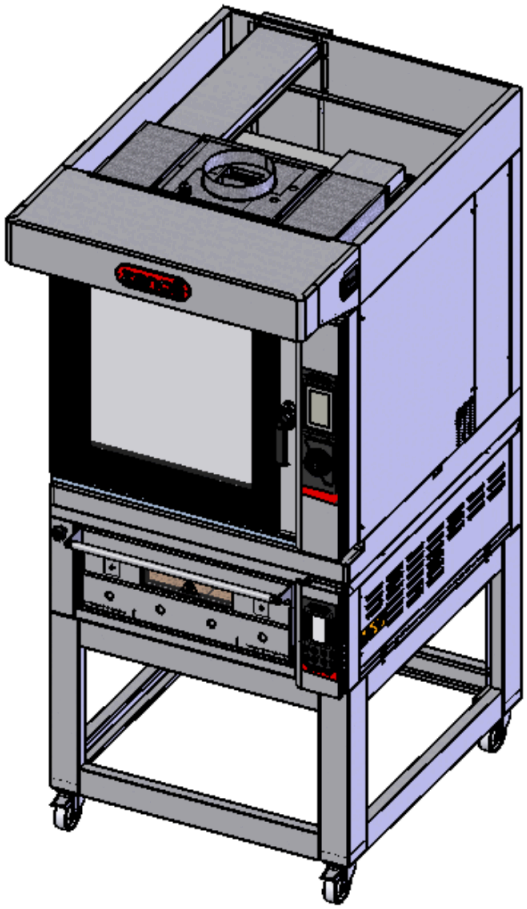

SPECIFICATIONS

Voltage	400V 3 Phase
Power	16.9 kw
Weight	319 kg
Plug Supplied	No
Capacity	6 Trays (400 x 600) for Anemos Bakery Combi 2 Trays (400 x 600) for Teorema Polis Pastry Deck Oven 5 Trays (400 x 600) for Proving Cabinet
Thermostat	260°C Teorema Anemos bakery Combi 400°C Teorema Polis Bakery Deck

COMPONENTS

1 x Ventilation Hood Top	1COM019A
1 x 6 Tray TEOREMA Anemos 6E/MC TOUCH Bakery Combi Oven.	5FC0403
1 x Stacking kit	1COM006A
1 x TPOLIS 2S 2 tray Bakery Deck Oven	2P02H05B
1 x Heavy Duty High Stand on Castors	1COM012A

DIMENTIONS

External Width	970mm
External Depth	1351mm (including hood)
External Height	2211mm

TAE61SH
EXHAUST HOOD STRUCTURE AND PROVISION

FRONT

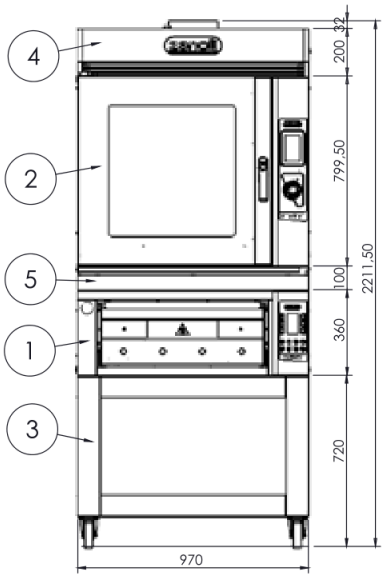

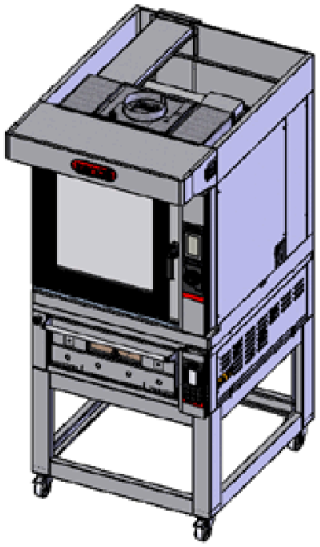

SIDE

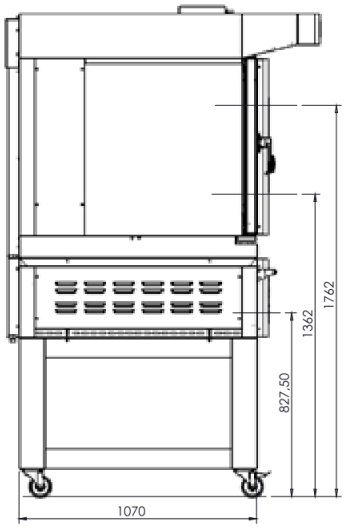

Item num.	Quantity	Description	Power	Trays	Distance between trays
1	1	T POLIS 2S	6.4 kW	n°2	
2	1	T ÀNEMOS 6E TOUCH	10.5 kW	n°6	80mm
3	1	STAND WITH CASTORS			
4	1	EXHAUST HOOD	0.3 kW		
5	1	KIT COMBI			

Optional	Power
STEAM BOILER FOR DECK OVEN	2.8KW

REAR

TOP

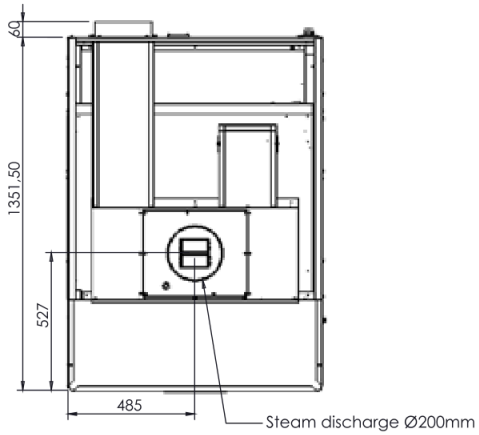

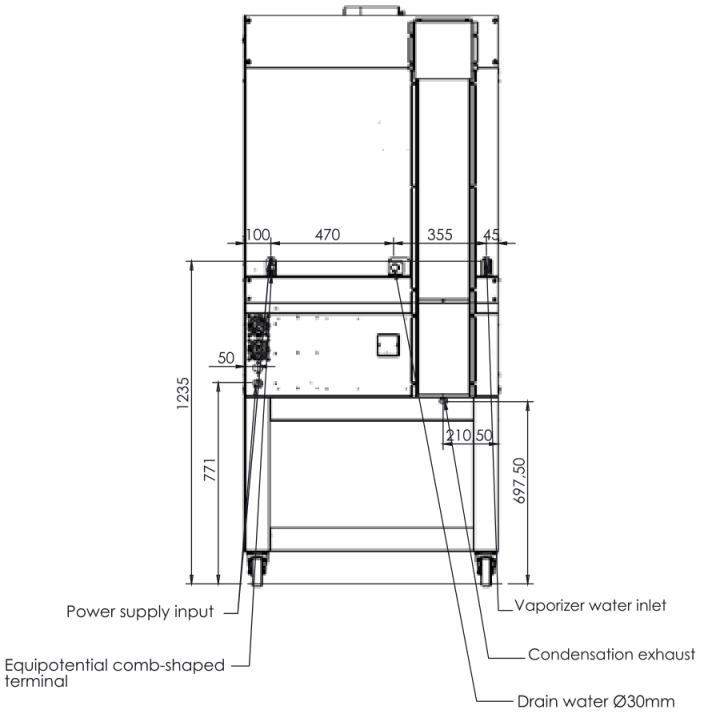

We reserve the right to alter specifications without notice.

TAE61SH

EXHAUST HOOD STRUCTURE, PROVISION & MOTOR (400M3/600M3 CAPACITY)

FRONT

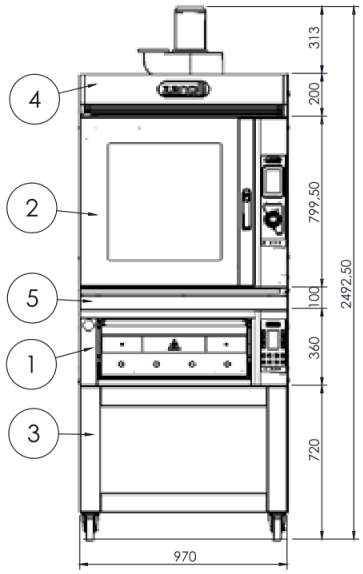

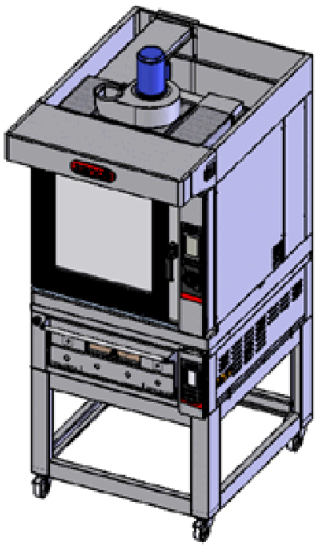

Item num.	Quantity	Description	Power	Trays	Distance between trays
1	1	T POLIS 2S	6.4 kW	n°2	
2	1	T ÀNEMOS 6E TOUCH	10.5 kW	n°6	80mm
3	1	STAND WITH CASTORS			
4	1	EXHAUST HOOD WITH MOTOR	0.25 kW		
5	1	KIT COMBI			

Optional	Power
STEAM BOILER FOR DECK OVEN	2.8KW

SIDE

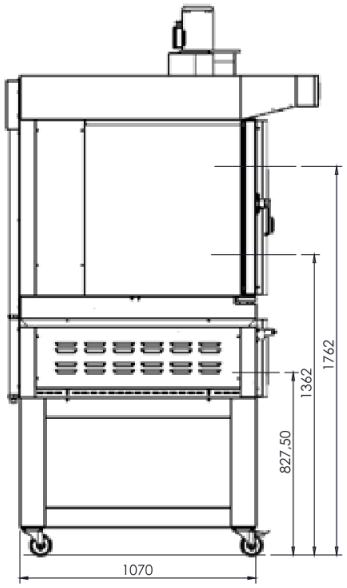

REAR

TOP

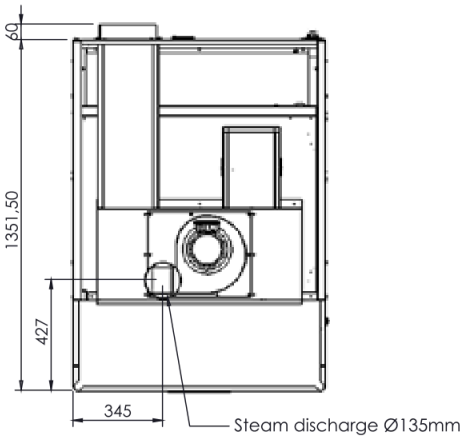

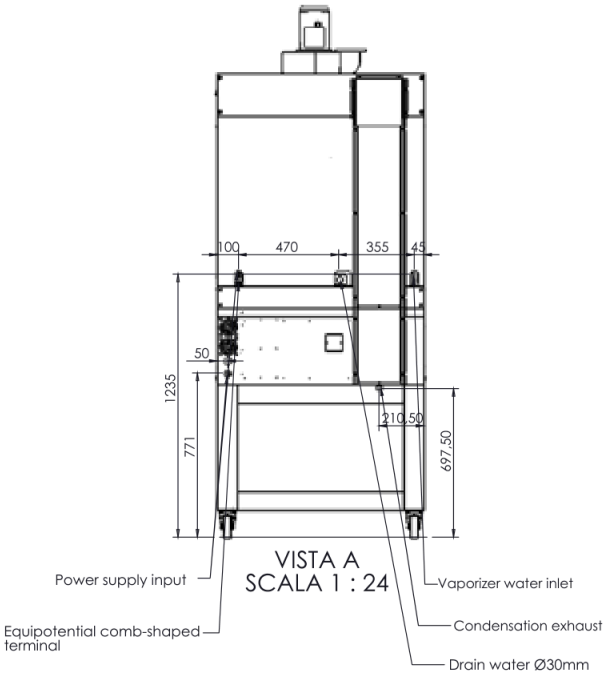

We reserve the right to alter specifications without notice.

TAE61SH
NO EXHAUST PROVISION

FRONT

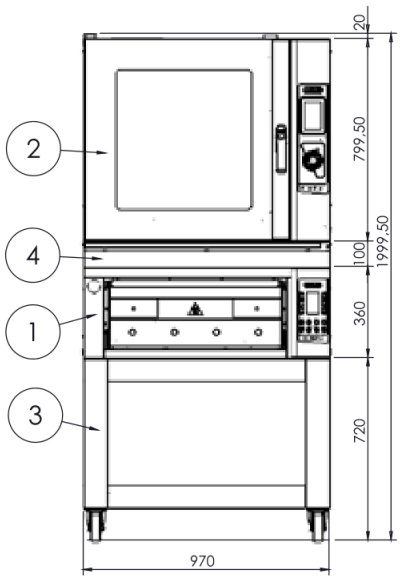

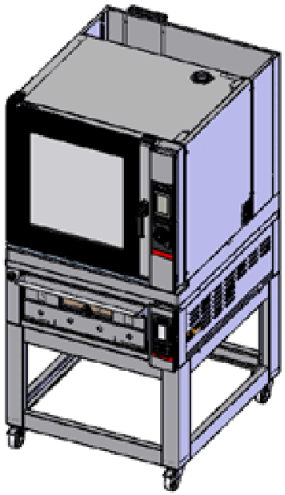

SIDE

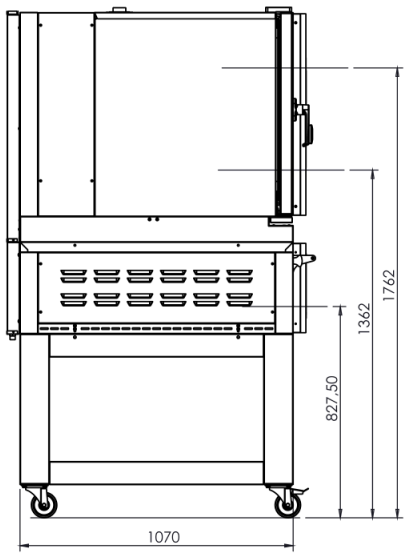

Item num.	Quantity	Description	Power	Trays	Distance between trays
1	1	T POLIS 2S	6.4 kW	n°2	
2	1	T ÀNEMOS 6E TOUCH	10.5 kW	n°6	80mm
3	1	STAND WITH CASTORS			
4	1	KIT COMBI			

Optional	Power
STEAM BOILER FOR DECK OVEN	2.8KW

REAR

TOP

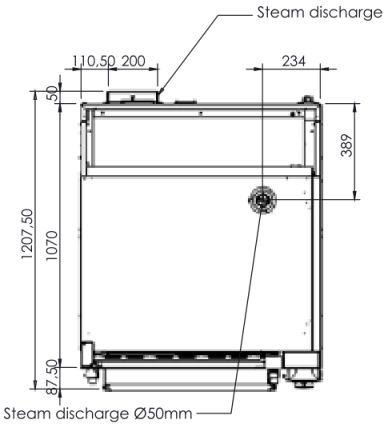

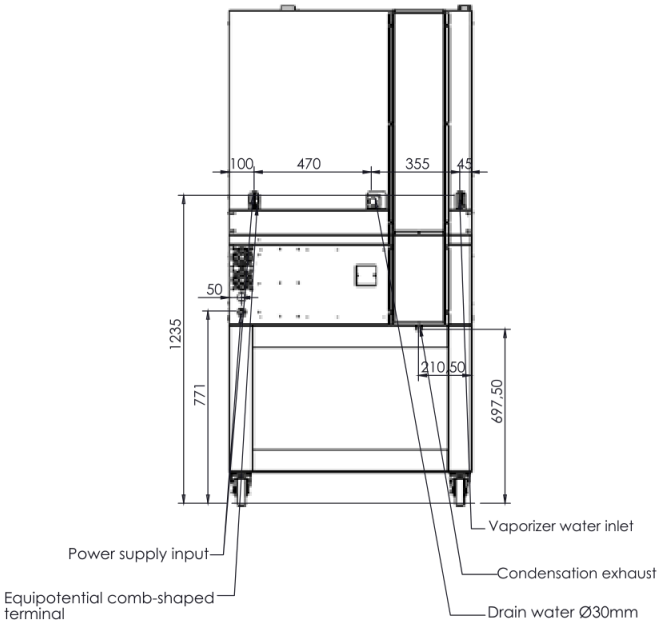

We reserve the right to alter specifications without notice.