TAE61P5
BAKERY COMBI / PASTRY DECK COMBINATIONS

Main Features

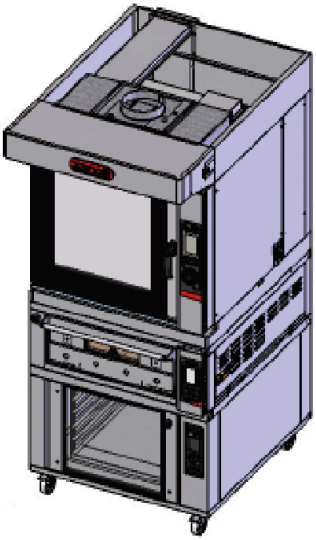

HOOD
Exhaust Hood with Optional 400 or 600 mc3 Suction capacity.

BAKING CHAMBER
- 6 Trays Capacity (600 x 400)
- Large 80mm Tray Spacing
- Self cleaning
- Weekly Auto Start Up
- 147 Baking Programs
- 2 speed fan regulation
- Bi-directional reversing fan system
- Halogen light
- Convection Cooking
- Combination Cooking
- Steam Cooking
- Probe Cooking
- Touch Panel User Control
- Automatic Preheat
- 6 Cooking Cycles for each Program
- Digital Steam Exhaust Regulation
- Water injection regulation

DECK OVENS
- 1 x Teorema Polis Pastry Deck Ovens accommodating 2 x (600 x 400) Tray(s)
- Stone / or steel base options
- Optional steam Boiler

PROVER
- 5 Trays Capacity (600 x 400)
- Large 75mm Tray Spacing
- Proofer with pan-holder
- Optional humidifier
- Door made of tempered glass
- Castor wheels with brakes

SPECIFICATIONS

Voltage	400V 3 Phase
Power	17.9 kw
Weight	360 kg
Plug Supplied	No
Capacity	6 Trays (400 x 600) for Anemos Bakery Combi 2 Trays (400 x 600) for Teorema Polis Pastry Deck Oven 5 Trays (400 x 600) for Proving Cabinet
Thermostat	260°C Teorema Anemos bakery Combi 400°C Teorema Polis Bakery Deck
Warranty	4 Year Warranty (2 yr Labour 4 yr Parts)

COMPONENTS

1 X Ventilation Hood Top	1COM019A
1 X 6 Tray Teorema Anemos 6E/MC Touch Bakery Combi Oven	5FC0403
1 X Stacking Kit	1COM006A
1 X TPOLIS 2S 2 Tray Baking Deck Oven	2PO2H05B
1 X 5 Tray Prover Cabinet with Humidifier	1COM008A

DIMENTIONS

External Width	970mm
External Depth	1351mm (including hood)
External Height	2211mm

TAE61P5

EXHAUST HOOD STRUCTURE AND PROVISION

FRONT

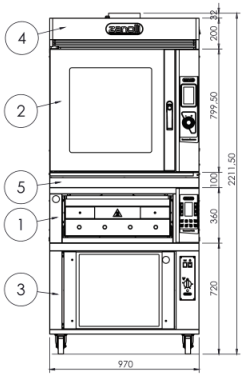

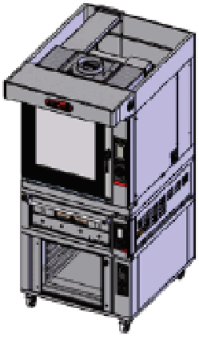

Item num.	Quantity	Description	Power	Trays	Distance between trays
1	1	T.POI15 45	6.4 kW	n°2	
2	1	T.ANEMOS 6E TOUCH	10.5 kW	n°6	80mm
3	1	PROOFING CABINET	1 kW	n°10	75mm
4	1	EXHAUST HOOD	0.3 kW		
5	1	KIT COMBI			

Optional	Power
HUMIDIFIER FOR PROVING CABNIT	1KW
STEAM BOILER FOR DECK OVEN	2.8KW

SIDE

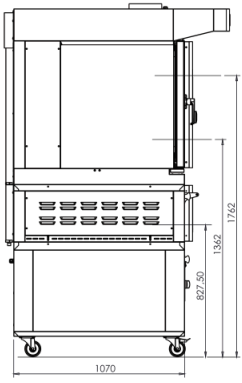

REAR

TOP

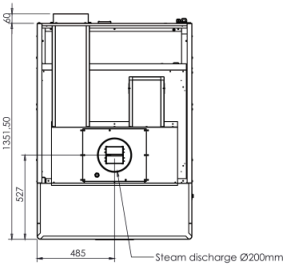

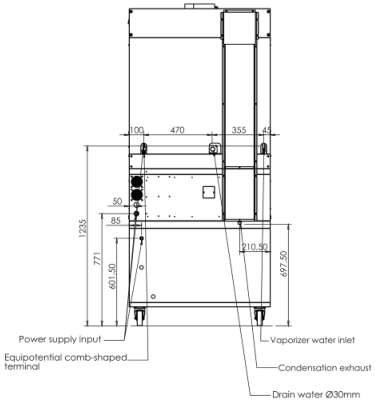

We reserve the right to alter specifications without notice.

TAE61P5

EXHAUST HOOD STRUCTURE, PROVISION & MOTOR (400M3/600M3 CAPACITY)

FRONT

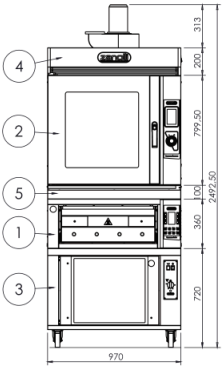

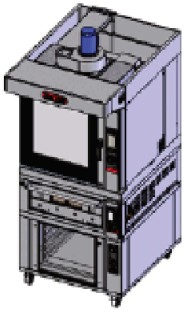

SIDE

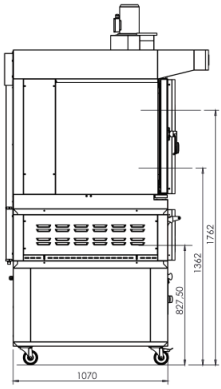

Item num.	Quantity	Description	Power	Trays	Distance between Trays
1	1	T.POLIS 25	6.4 kW	n°2	
2	1	T.ANEMOS 6E TOUCH	10.5 kW	n°6	80mm
3	1	PROOFING CABINET	1 kW	n°10	75mm
4	1	EXHAUST HOOD WITH MOTOR	0.25 kW		
5	1	KIT COMBI			

Optional	Power
HUMIDIFIER FOR PROVING CABNIT	1KW
STEAM BOILER FOR DECK OVEN	2.8KW

REAR

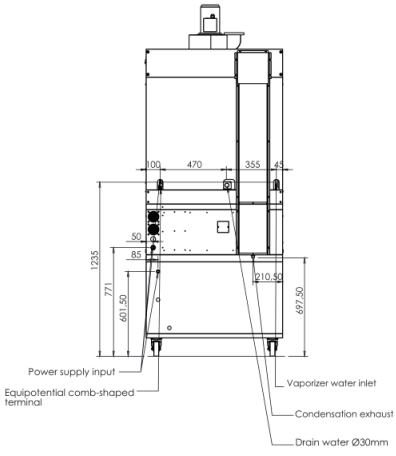

TOP

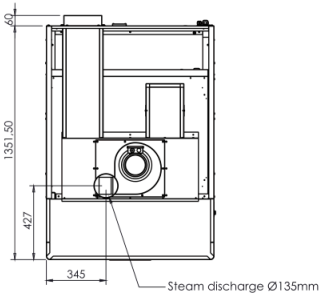

We reserve the right to alter specifications without notice.

TAE61P5
NO EXHAUST PROVISION

FRONT

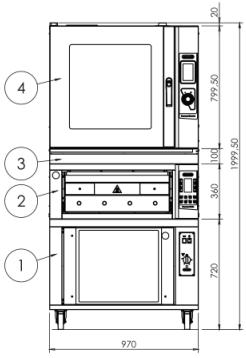

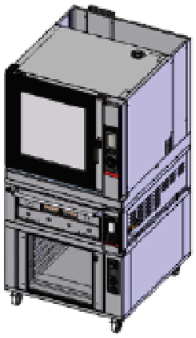

SIDE

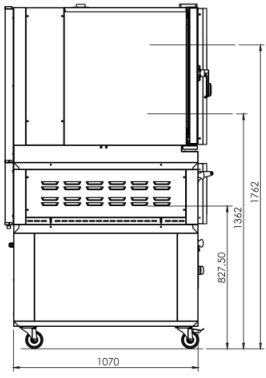

Item num.	Quantity	Description	Power	Trays	Distance between trays
1	1	PROOFING CABINET	1 kW	n°10	75mm
2	1	T POLIS 2S	6.4 kW	n°2	
3	1	KIT COMBI			
4	1	T ÀNEMOS 6E TOUCH	10.5 kW	n°6	80mm

Optional	Power
HUMIDIFIER FOR PROVING CABNIT	1KW
STEAM BOILER FOR DECK OVEN	2.8KW

REAR

TOP

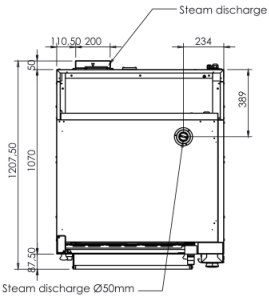

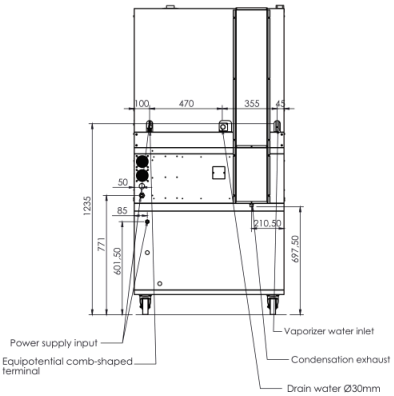

We reserve the right to alter specifications without notice.