TAE101SL
BAKERY COMBI / PASTRY DECK COMBINATIONS

Main Features

HOOD
Exhaust Hood with Optional 400 or 600 mc3 Suction capacity.

BAKING CHAMBER
- 10 Trays Capacity (600 x 400)
- Large 80mm Tray Spacing
- Self cleaning
- Weekly Auto Start Up
- 147 Baking Programs
- 2 speed fan regulation
- Bi-directional reversing fan system
- Halogen light
- Convection Cooking
- Combination Cooking
- Steam Cooking
- Probe Cooking
- Touch Panel User Control
- Automatic Preheat
- 6 Cooking Cycles for each Program
- Digital Steam Exhaust Regulation
- Water injection regulation

DECK OVENS
- 1 x Teorema Polis Pastry Deck Ovens accommodating 2 x (600 x 400) Trays
- Stone / or steel base options
- Optional steam Boiler

STAND
- Heavy Duty Stand with Lockable Castors

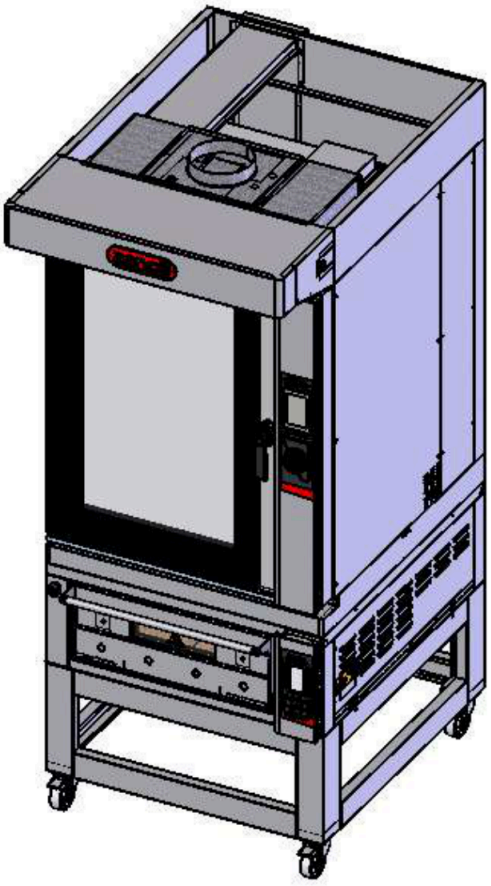

SPECIFICATIONS

Voltage	400V 3 Phase
Power	22.1 kw
Weight	350 kg
Plug Supplied	No
Capacity	10 Trays (400 x 600) for Anemos Bakery Combi 2 Trays (400 x 600) for Teorema Polis Pastry Deck Oven
Thermostat	260°C Teorema Anemos bakery Combi 400°C Teorema Polis Bakery Deck
Warrenty	4 Year Warranty (2 yr Labour 4 yr Parts)

COMPONENTS

1 x Ventilation Hood Top	1COM019A
1 x 10 Tray TEOREMA Anemos 10E/MC TOUCH Bakery Combi Oven	5FC0503
1 x Stacking kit	1COM010A
1 x TPOLIS 2S 2 tray Bakery Deck Oven	2PO2H05B
1 x Heavy Duty low Stand on Castors	1COM011A

DIMENTIONS

External Width	970mm
External Depth	1351mm (including hood)

TAE101SL
EXHAUST HOOD STRUCTURE AND PROVISION

FRONT

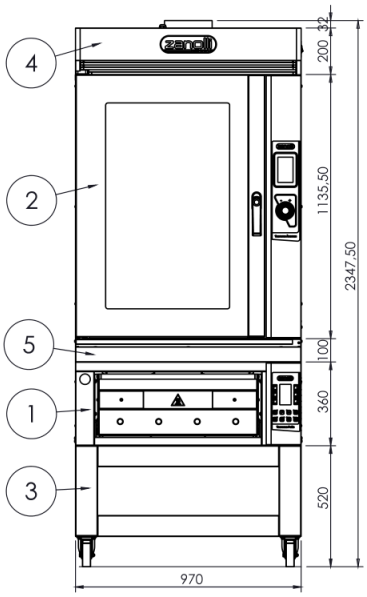

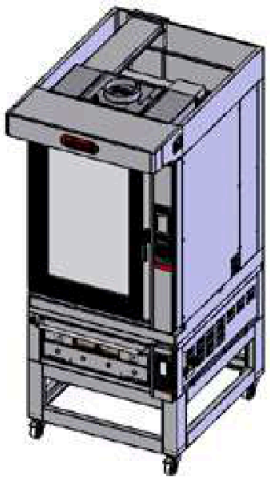

SIDE

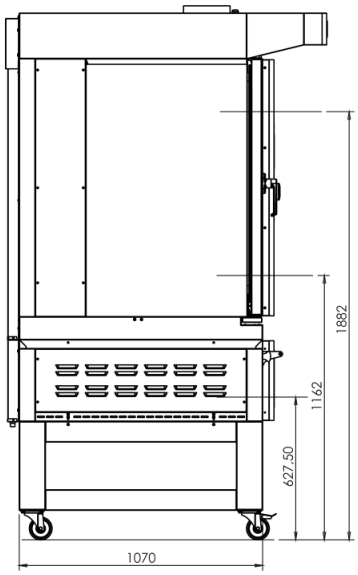

Item num.	Quantity	Description	Power	Trays	Distance between trays
1	1	T POLIS 2S	6.4 kW	n°2	
2	1	T ANEMOS 10E TOUCH	15.7 kW	n°10	80mm
3	1	STAND WITH CASTORS			
4	1	EXHAUST HOOD	0.3 kW		
5	1	KIT COMBI			

Optional	Power
STEAM BOILER FOR DECK OVEN	2.8KW

REAR

TOP

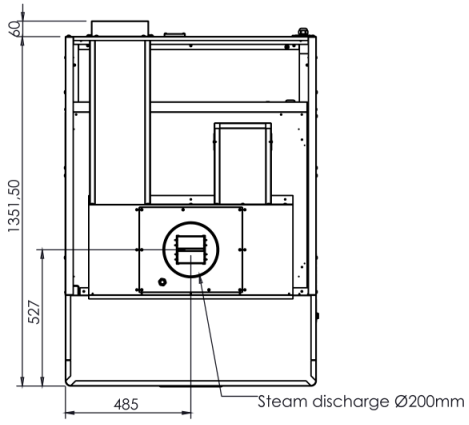

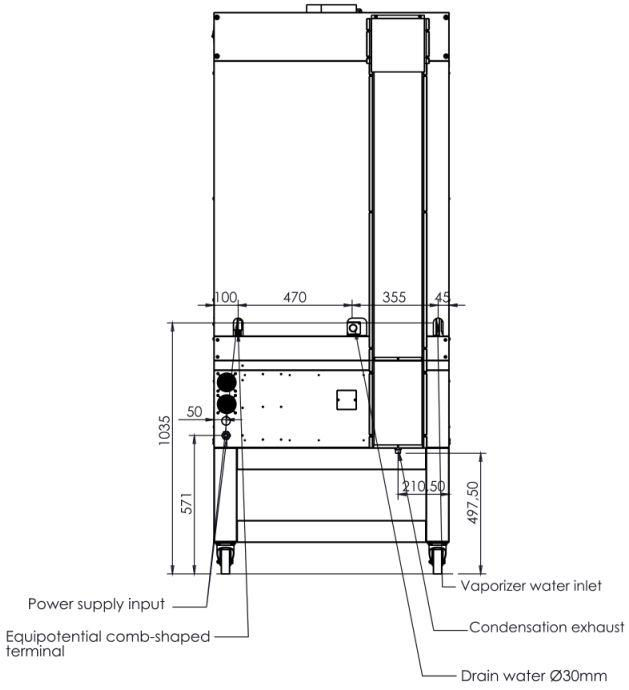

We reserve the right to alter specifications without notice.

TAE101SL

EXHAUST HOOD STRUCTURE, PROVISION & MOTOR (400M3/600M3 CAPACITY)

FRONT

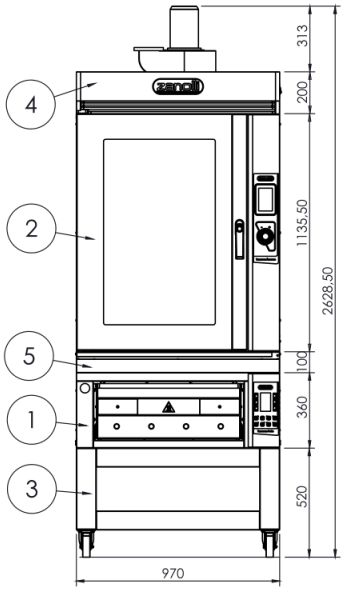

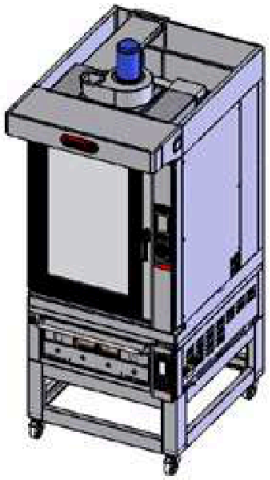

SIDE

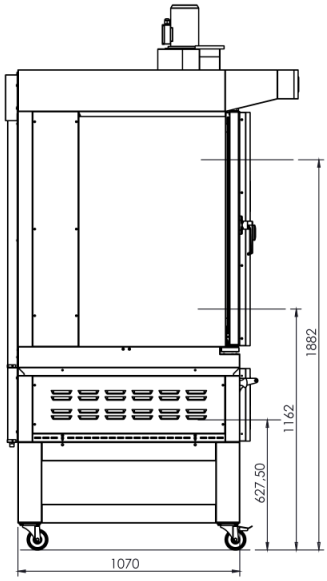

Item num.	Quantity	Description	Power	Trays	Distance between trays
1	1	T POLIS 2S	6.4 kW	n°2	
2	1	T ÀNEMOS 10E TOUCH	15.7 kW	n°10	80mm
3	1	STAND WITH CASTORS			
4	1	EXHAUST HOOD WITH MOTOR	0.25 kW		
5	1	KIT COMBI			

Optional	Power
STEAM BOILER FOR DECK OVEN	2.8KW

REAR

TOP

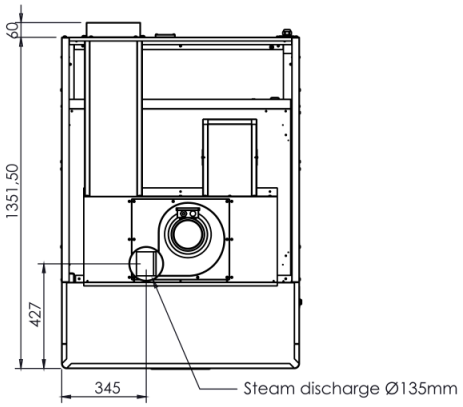

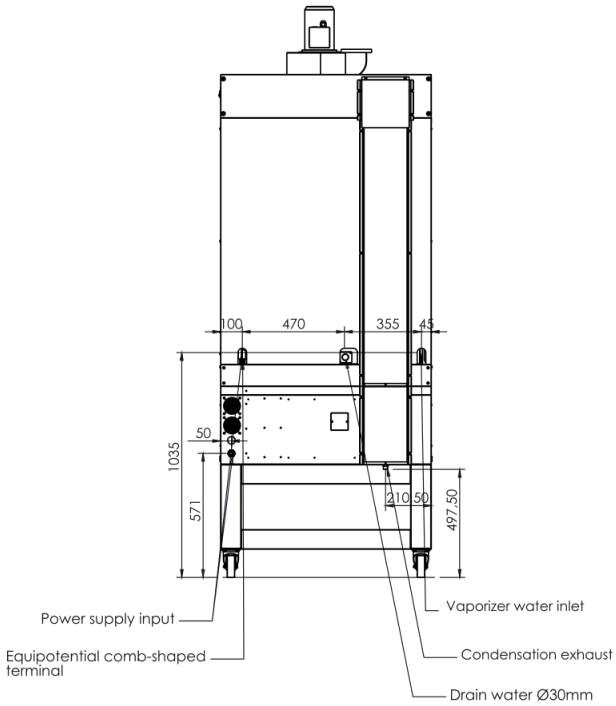

We reserve the right to alter specifications without notice.

TAE101SL
NO EXHAUST PROVISION

FRONT

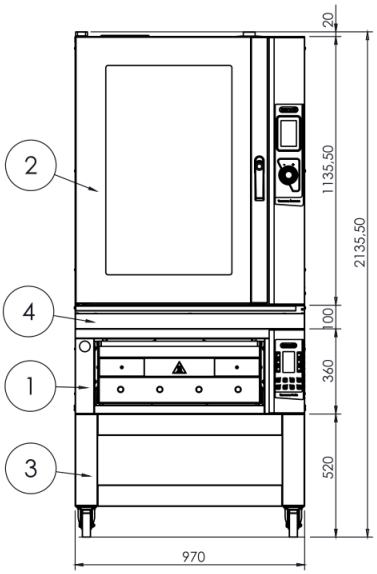

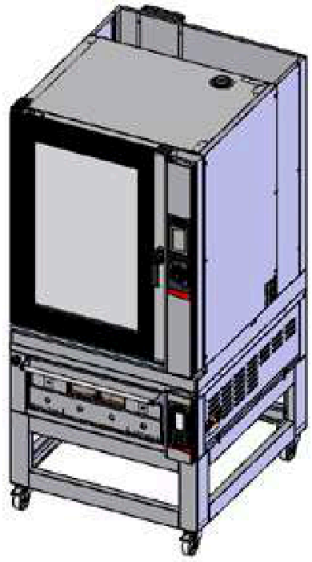

SIDE

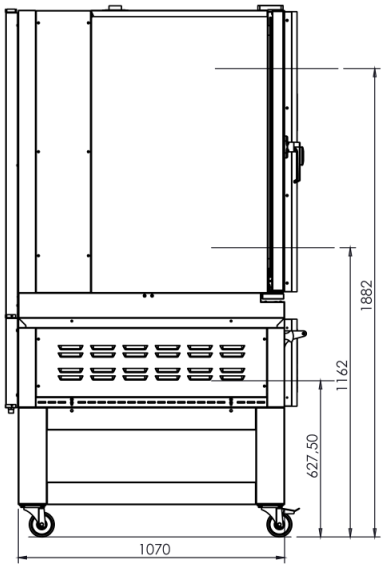

Item num.	Quantity	Description	Power	Trays	Distance between trays
1	1	T POLIS 2S	6.4 kW	n°2	
2	1	T ÀNEMOS 10E TOUCH	15.7 kW	n°10	80mm
3	1	STAND WITH CASTORS			
4	1	KIT COMBI			

Optional	Power
STEAM BOILER FOR DECK OVEN	2.8KW

REAR

TOP

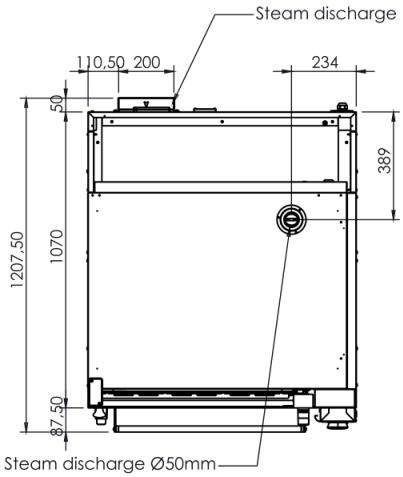

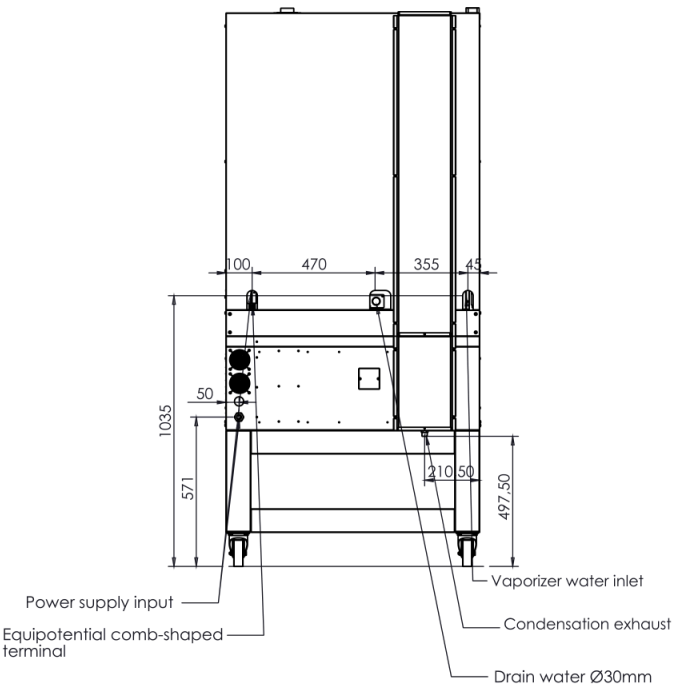

We reserve the right to alter specifications without notice.