TAE101P3

BAKERY COMBI / PASTRY DECK COMBINATIONS

Main Features

HOOD

Exhaust Hood with Optional 400 or 600 mc3 Suction capacity.

BAKING CHAMBER

- 10 Trays Capacity (600 x 400)
- Large 80mm Tray Spacing
- Self cleaning
- Weekly Auto Start Up
- 147 Baking Programs
- 2 speed fan regulation
- Bi-directional reversing fan system
- Halogen light
- Convection Cooking
- Combination Cooking
- Steam Cooking
- Probe Cooking
- Touch Panel User Control
- Automatic Preheat
- 6 Cooking Cycles for each Program
- Digital Steam Exhaust Regulation
- Water injection regulation

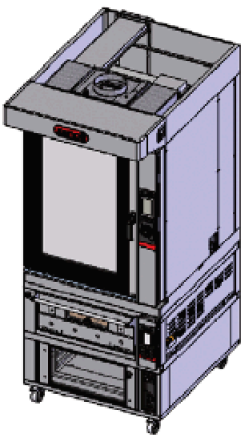

DECK OVENS

- 1 x Teorema Polis Pastry Deck Ovens accommodating 2 x (600 x 400) Trays
- Stone / or steel base options
- Optional steam Boiler

PROVER

- 3 Trays Capacity (600 x 400)
- Large 75mm Tray Spacing
- Proofer with pan-holder
- Optional humidifier
- Door made of tempered glass
- Castor wheels with brakes

SPECIFICATIONS

Voltage	400V 3 Phase
Power	23.1 kw
Weight	385 kg
Plug Supplied	No
Capacity	10 Trays (400 x 600) for Anemos Bakery Combi 2 Trays (400 x 600) for Teorema Polis Pastry Deck Oven 3 Trays (400 x 600) for Proving Cabinet
Thermostat	260°C Teorema Anemos bakery Combi 400°C Teorema Polis Bakery Deck

COMPONENTS

1 x Ventilation Hood Top	1COM019A
1 x 10 Tray TEOREMA Anemos 10E/MC TOUCH Bakery Combi Oven	5FC0503
1 x Stacking kit	1COM010A
1 x TPOLIS 2S 2 tray Bakery Deck Oven	2P02H05B
1 x 3 Tray Proving Cabinet with Humidifier on Castors	1COM009A

DIMENTIONS

External Width	970mm
External Depth	2347mm (including hood)

TAE101P3
EXHAUST HOOD STRUCTURE AND PROVISION

FRONT

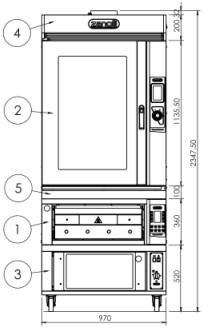

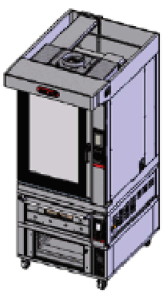

Item num.	Quantity	Description	Power	Trays	Distance between trays
4	1	KIT COMBI TOUCH 2/1	6.4 kW	n°5	
2	1	ANEMOS 10E TOUCH	19.7 kW	n°10	80mm
3	1	PROOFING CABINET	1 kW	n°6	75mm
4	1	EXHAUST HOOD	0.3 kW		

Optional	Power
HUMIDIFIER FOR PROVING CABNIT	1KW
STEAM BOILER FOR DECK OVEN	2.8KW

SIDE

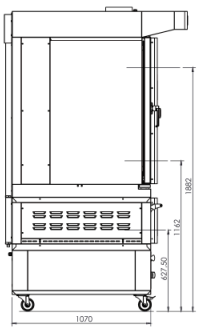

REAR

TOP

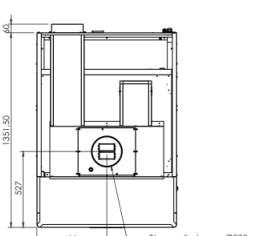

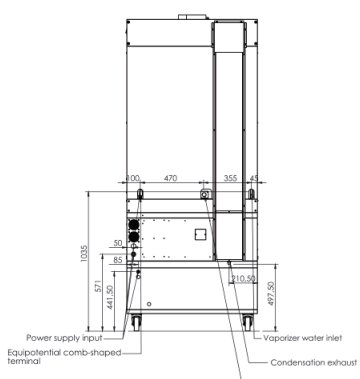

We reserve the right to alter specifications without notice.

TAE101P3

EXHAUST HOOD STRUCTURE, PROVISION & MOTOR (400M3/600M3 CAPACITY)

FRONT

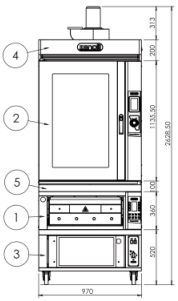

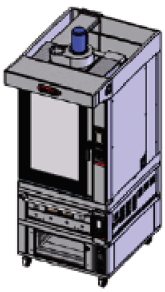

SIDE

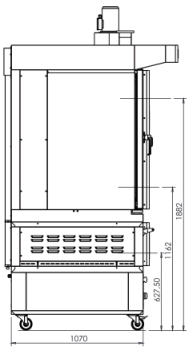

Item num.	Quantity	Description	Power	Trays	Distance between trays
1	1	T.POLIS 25	6,4 kW	n°5	
2	1	T.ANEMOS TIE TOUCH	15,7 kW	n°10	80mm
3	1	PROOFING CABINET	1 kW	n°6	75mm
4	1	EXHAUST HOOD WITH MOTOR	0,25 kW		
5		KIT COMBI			

Optional	Power
HUMIDIFIER FOR PROVING CABNIT	1KW
STEAM BOILER FOR DECK OVEN	2.8KW

REAR

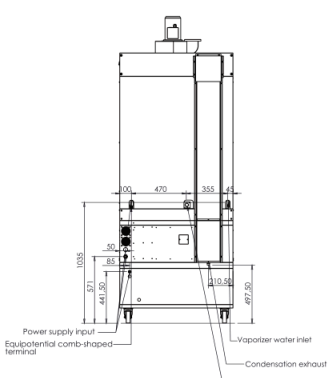

TOP

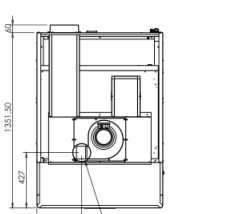

We reserve the right to alter specifications without notice.

TAE101P3
NO EXHAUST PROVISION

FRONT

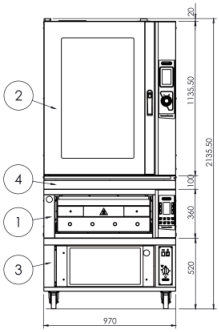

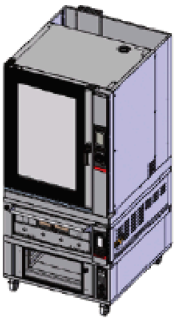

SIDE

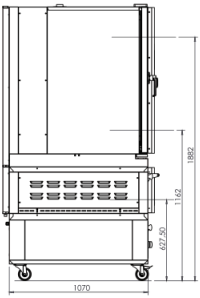

Item num.	Quantity	Description	Power	Trays	Distance between trays
1	1	T POUS 25	6.4 kW	n°2	
2	1	T ANEMOS 10E TOUCH	15.7 kW	n°10	80mm
3	1	PROOFING CABINET	1 kW	n°6	75mm
4	1	KIT COMBI			

Optional	Power
HUMIDIFIER FOR PROVING CABNIT	1KW
STEAM BOILER FOR DECK OVEN	2.8KW

REAR

TOP

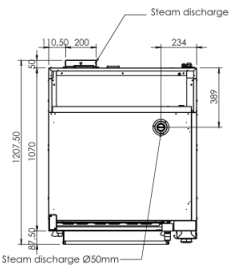

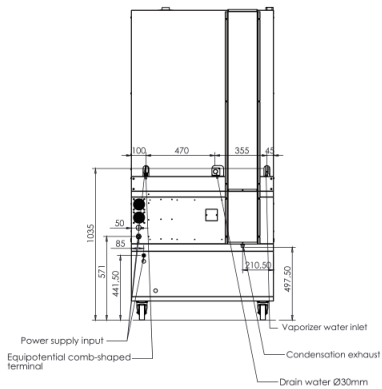

We reserve the right to alter specifications without notice.