# DATA SHEET

## Polis 2S/MC18-2 Double Deck Bakery Oven
## 2 + 2 Tray (400x600) Capacity

POM1E04A-2




## Build

- The Polis 2S/MC18-2 is configured as a double-deck unit with a 180 mm baking chamber height and can be stacked with up to 2 additional units, allowing for a total of 4 units.
- This versatile modular multi-function design ensures high-performance baking for pizzas, breads, and pastries, supported by 70 years of experience in technology, people, and research.
- Unique narrow format design at just 970 mm wide for optimal space utilization, with the ability to fit 600 x 400 trays deep one after another for maximum space efficiency.
- Heavy-duty full stainless steel construction combined with a sleek, modern design.
- Robust construction with a fully sealed, vented, and washable baking chamber featuring removable rails.
- Heavy-gauge front door requires no maintenance and is gasket-free, spring-free, and double-insulated with best-in-class insulation, ensuring minimal thermal heat loss.
- Reinforced, double-insulated stainless steel door with double glass-ceramic fireproof windows.
- Armored stainless steel heating elements minimize heat loss from frequent door openings and high-volume usage.
- High-powered elements mounted at the door opening compensate for heat loss, ensuring consistent baking temperatures and minimal heat loss during high-volume use.
- Standard thick refractory stone cooking base enhances heat retention and absorption for superior cooking performance and even heat distribution
- Completely modular design allows you to stack up to 4 modules, enabling your oven to grow with your business.
- The control panel offers 20 programmable cooking settings, including temperature (0–400°C), timer, element power (0–9), and steam injection. Programs can be saved and named for easy retrieval.
- Schedule up to two programmed starts per day with your customized baking settings, each spaced an hour apart.
- Intuitive color display and audible buzzer signal the user when cooking is finished.
- Pre-heating functionality with configurable slow and fast modes ensures the oven is automatically ready for use.
- The Economy mode is easily activated with a button on the control panel, reducing energy consumption while maintaining oven temperature and saving on energy costs.
- Auto-cleaning function with a 45-minute program automatically sanitizes the cooking chamber for consistent hygiene.
- Balanced dual top and bottom detection probes ensure accurate temperature regulation across the entire baking chamber, providing even baking conditions.
- Independent top and bottom heating adjustments (0–9 intensity) allow precise control of heat distribution without changing chamber temperature, ensuring optimal baking and consistent, high-quality results.
- Manual exhaust valve for humidity management
- LED lamp chamber lighting for low energy consumption and long life.
- Optional steel embossed base improves air circulation beneath the pan for optimized tray cooking.
- Optional steam generators can be added to the deck oven for high-quality steam. Once installed, steam is activated via the control panel, programmed into baking cycles, or manually injected as needed.
- Optional accessories include leavening cells, adjustable stands, bread loaders, tray racks, and built-in extractor hoods, all compliant with Australian and NZ standards.
- The Teorema Polis is built with the highest-quality materials and components, making it a reliable and durable choice and a testiment to its useage around the world.

## OPTIONS

| |
|---|
| Stand on castors |
| Exhaust Canopy |
| Prover |
| Steam Generator |
| Bread Loaders |

## Controls

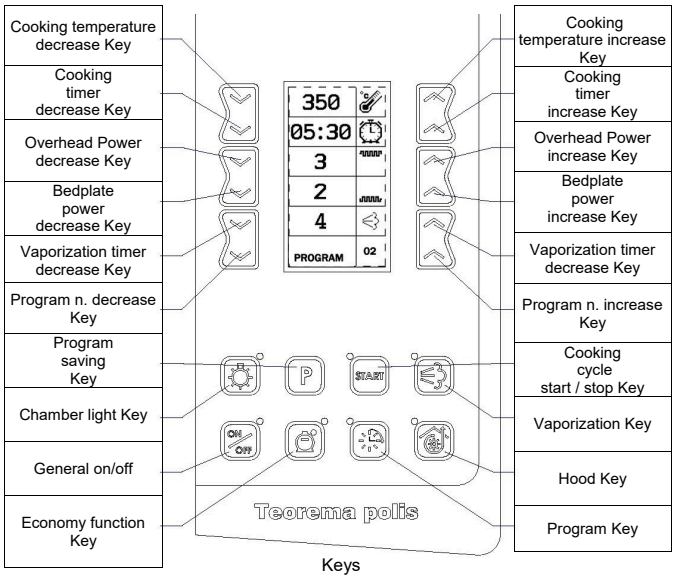


Keys

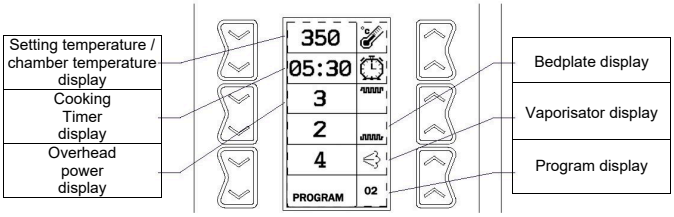

# DATA SHEET

## Polis 2S/MC18-2 Double Deck Bakery Oven 2 + 2 Tray (400x600) Capacity

POM1E04A-2

## Technical specifications

**External Size**

| | |
|---|---|
| External Width | 970mm |
| External Depth | 1210mm |
| External Height | 720mm |

**Cooking Chamber size**

| | |
|---|---|
| Internal Width | 650mm |
| Internal Depth | 860mm |
| Internal Height | 180mm |

**Baking Pans**

| | |
|---|---|
| Number of Pans | 2 + 2 |
| Pan Width | 600mm |
| Pan Depth | 400mm |

**Weight**

| | |
|---|---|
| Net weight | 136 kg x 2 |
| package weight | * |

**Connection requirements electric triphase + neutral or triphase**

| | |
|---|---|
| Electrical connected loads | 6.4 kW x 2 |
| Voltage | 415V or 240V upon request |
| Plug Supplied | No |
| Cable Length | 2m |
| Current at 400V - 3N | 10.5 |
| Current at 230V - 3 | 18 |
| Level of protection | IP23 |
| Electrical connection | Plugless 4 or 5 conductors |

**Exhaust**

| | |
|---|---|
| Air exchange | 65 m3/h |

**Minimum clearances during installation**

| | | | |
|---|---|---|---|
| Minimum clearance | Left | Back | Right |
| Standard | 200mm | 0mm | 200mm |

**Environment**

| | |
|---|---|
| **Temperature** | 0 - 40 °c |
| **Maximum humidity** | 95% without condensation |
| **Noise** | < 70 decibels |

**Operation**

| | |
|---|---|
| **Maximum Temperature** | 400°c |

**Warranty**

| |
|---|
| **2 years warranty Parts & Labour** |

**Subject to a prevanttitive maintence plan*

# DATA SHEET

## Polis 2S/MC18-2 Double Deck Bakery Oven
## 2 + 2 Tray (400x600) Capacity

POM1E04A-2

### Technical drawings

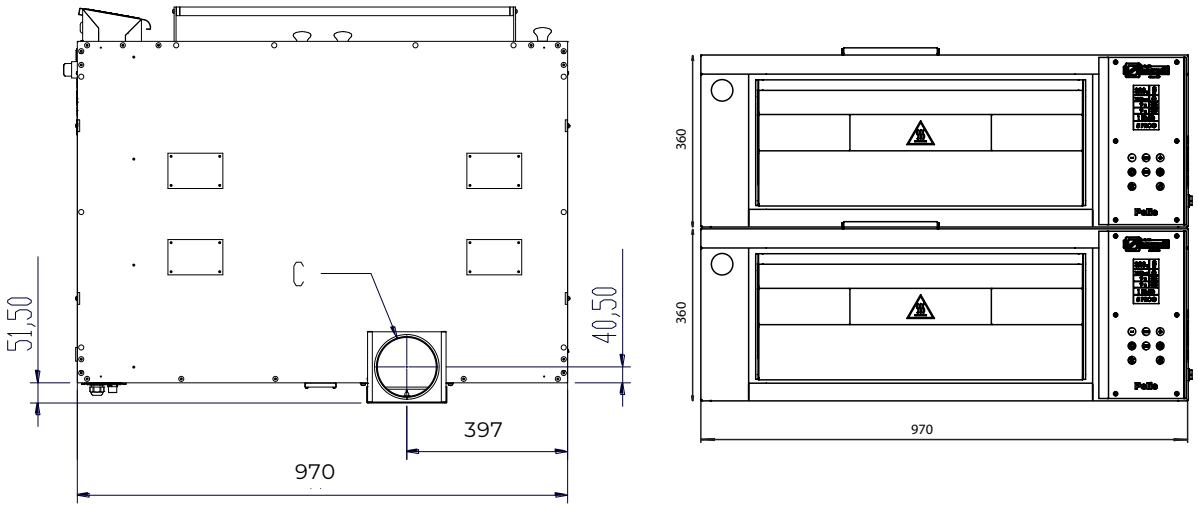


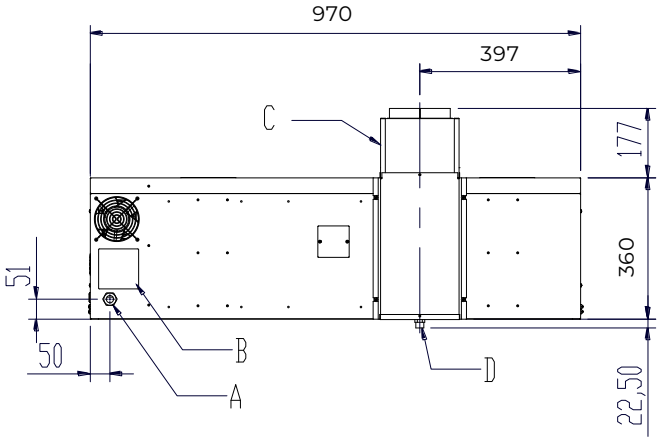


Rear and side view are shown
as a single deck view only for illustrative purposes per deck only.

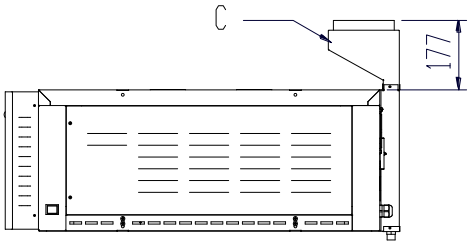


### Optional with hood

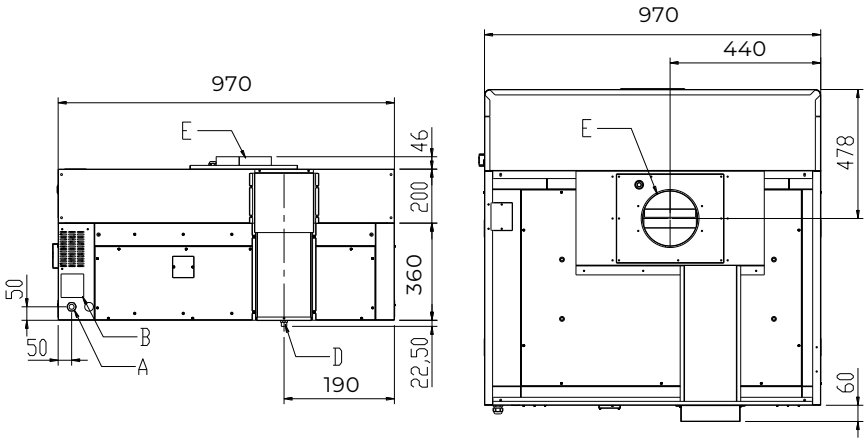


| | |
|---|---|
| A | ELECTRICAL POWER INPUT |
| B | INFORMATION PLATE |
| C | VAPOUR EXHAUST CONNECTION Ø 150mm |
| D | CONDENSATION EXHAUST |
| E | VAPOUR EXHAUST Ø 200mm |