DATA SHEET

Zanolli Synthesis 11/65-3 Triple Deck
26 Inch Electric Impingment Conveyor Oven

2SV4406C-3

Build

- Built entirely in stainless steel
- Double glazed full width inspection door.
- In built cooling system for all external parts ensures oven is cool to touch and work with.
- Heavy duty construction with reliable and durable components.
- Stackable up to 3 units.
- Optional Heavy duty stand with omnidirectional wheels and brakes



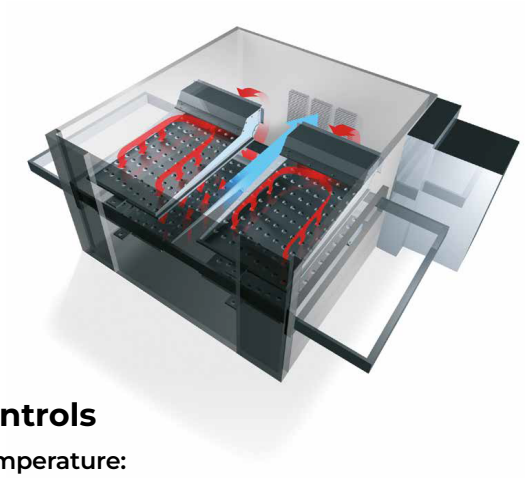

Impingment technology

- Maximum silence of the mesh conveyor system and ventilation motors.
- Latest advancements in air impingement technology allow for rapid heating & cooking of all foods consistently at all times.
- The piercing jets of hot turbulent air encompass every part of the oven delivering exceptional results every time.

Controls

Temperature:

- BRP (power regulation) system reaches working temperature in 20 minutes
- Balanced temperature detection system managed via dual oven probes..
- Maximum cooking temperature up to 320 °C
- Independent adjustment of the top and bottom power from from 50% to 100%.

Advanced control board automatically manages:

- Tempertaure and power consumption in peak and off peak times contributing to significant savings.
- The cooking intensity ensuring highest performance at the lowest temperatures

Customizable and Programmable up to:

- 10 Programmes with unique control over the below paramters:

  A = setting temperature
  B = top power (%)
  C = cooking timer
  D = bottom power (%)
  E = program name and n°

- 2 auto start ups per day with your selected program

Conveyor:

- Adjustable speed conveyor belt all the way to a complete halt. The dashes on the display move top to bottom simulating its movement

Economy function allows:

- The Economy function enables the oven to maintain a lower temperature when not in active use compared to when it's in operation. This feature conserves energy, leading to cost savings. Additionally, it controls the movement of the wire mesh conveyor, serving a dual purpose beyond just temperature management.

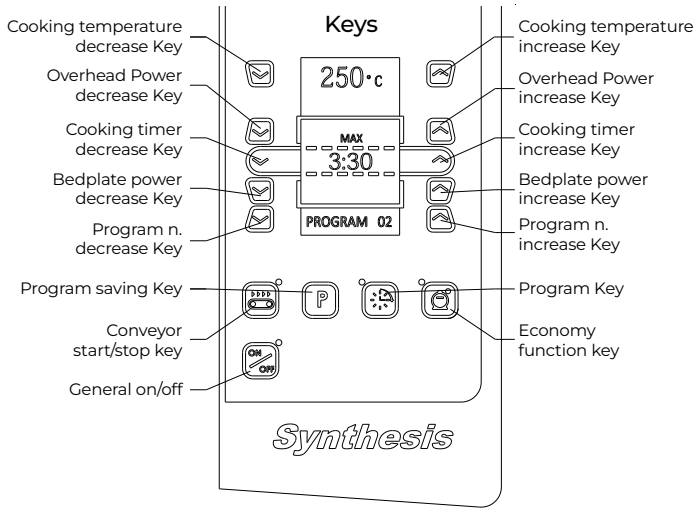

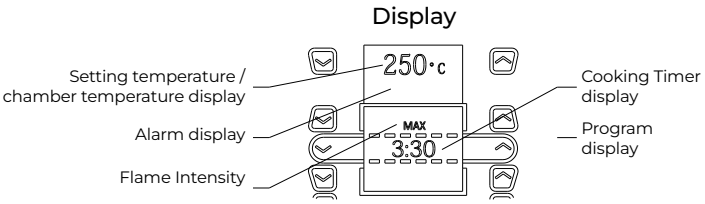

DATA SHEET

Zanolli Synthesis 11/65-3 Triple Deck
26 Inch Electric Impingment Conveyor Oven

2SV4406C-3

Technical specifications

External Size

External Width	1995mm
External Depth	1400mm
External Height	1650mm

Cooking Chamber size

Internal Width	1100mm
Internal Depth	650mm
Internal Height	100mm

Conveyor Belt Size

Conveyor Width	1920mm
Conveyor Depth	650mm

Weight

Net weight	222kg x 3
package weight	*

Connection requirements electric

Total electrical power	18,5 kW x 3

Electrical supply current (per oven)

Voltage	415V
Current at 380-415 V 3N~	31,5 A

Cable and Lead

Plug Supplied	No
Cable Length	2m
Wire section	10 mm2
Electrical connection	Plugless 5 lead cable

Recommended Clearances

Minimum clearance	Left	Rear	Right
Standard	200mm	200mm	200mm

Operating Environment

Temperature	0 - 40 °c
Maximum humidity	95% without condensation
Noise	< 70 decibels

Operation

Conveyor Belt speed	2.2 - 30min
Maximum Temperature	320°c

Warranty

2 Year Warranty	2 years parts and labour

**Subject to a prevanttitive maintence plan*

DATA SHEET

Zanolli Synthesis 11/65-3 Triple Deck
26 Inch Electric Impingment Conveyor Oven

2SV4406C-3

Options

☐

Micromesh belt - 6mm	
SKU	--

☐

Right to left Belt configuration	
SKU	--

☐

High speed conveyor belt gearbox	
SKU	--

☐

Stand suited for triple deck configuration	
SKU	0SV2A09
Size	1200 x 1100 x 170
Weight	17.5kg

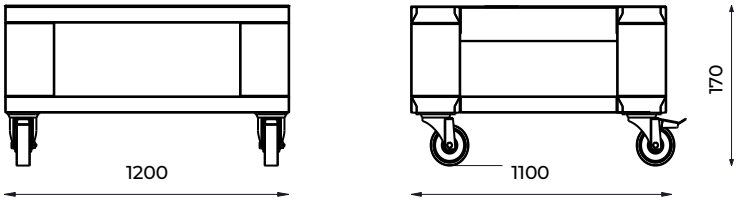

DATA SHEET

Zanolli Synthesis 11/65-3 Triple Deck
26 Inch Electric Impingment Conveyor Oven

2SV4406C-3

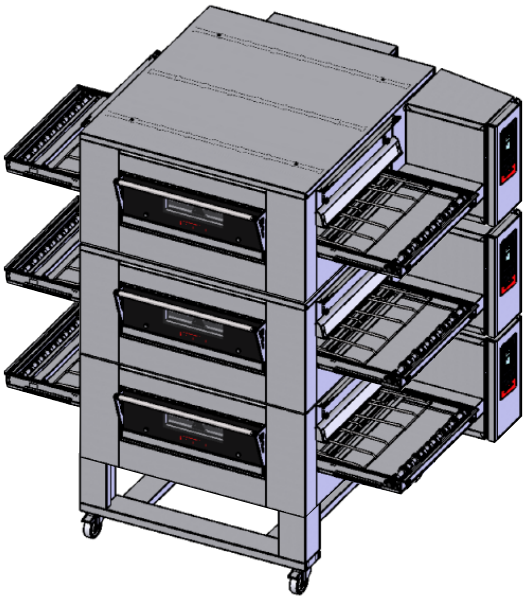

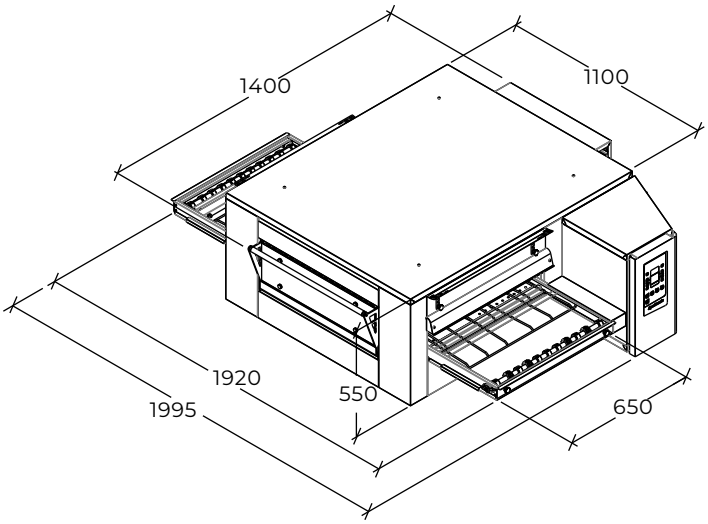

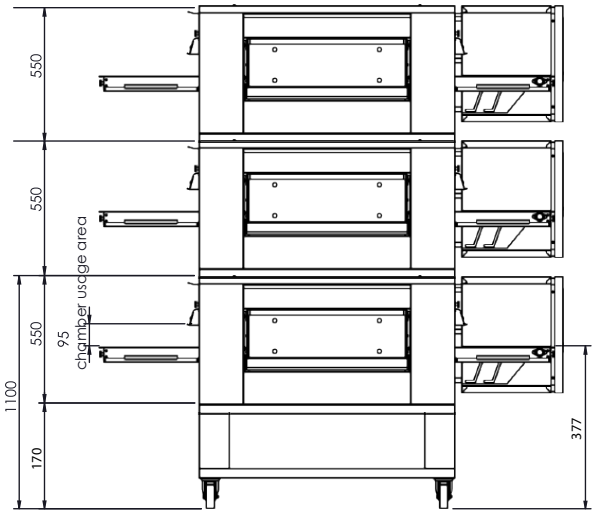

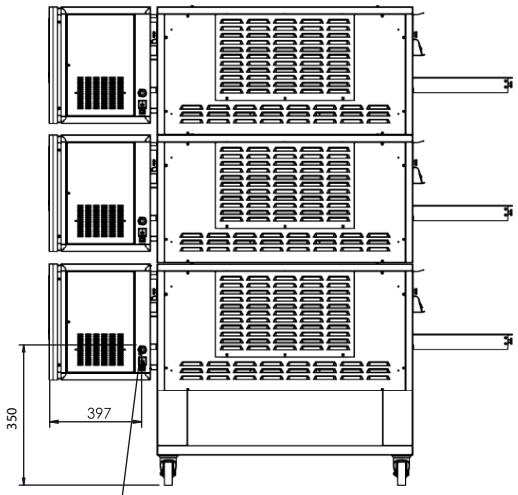

VISTA A

power supply entry

