DATA SHEET

Zanolli Synthesis 06/40G-2 Double Deck 16 Inch Gas Impingment Conveyor Oven

1SV4407C-2 ☐ LPG ☐ NAT



Build

- Built entirely in stainless steel
- Removable front chamber panel for easy cleaning and access
- In built cooling system for all external parts ensures oven is cool to touch and work with.
- Heavy duty construction with reliable and durable components.
- Stackable up to 3 units.
- Optional Heavy duty stand with omnidirectional wheels and brakes

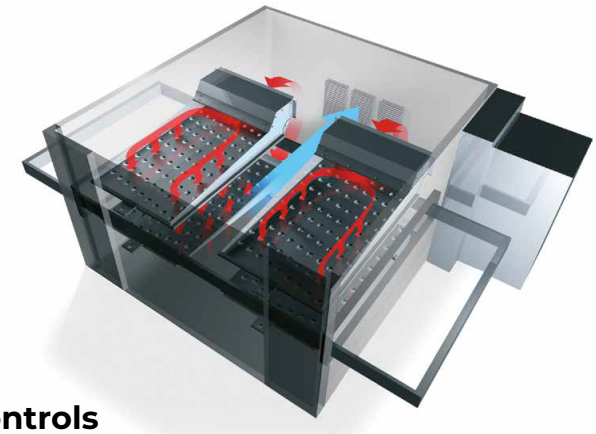

Impingment technology

- Maximum silence of the mesh conveyor system and ventilation motors.
- Latest advancements in air impingement technology allow for rapid heating & cooking of all foods consistently at all times.
- The piercing jets of hot turbulent air encompass every part of the oven delivering exceptional results every time.

Controls

Temperature:

- BRP (power regulation) system reaches working temperature in 20 minutes
- Balanced temperature detection system managed via dual oven probes..
- Maximum cooking temperature up to 320 °C

Advanced control board automatically manages:

- Energy consumption via electronic min/max flame controls contributing to significant savings.
- the cooking intensity ensuring highest performance at the lowest temperatures.

Customizable and Programmable up to:

- 10 programmes with unique temperatures and times.
- 2 auto start ups per day with your selected program

Economy function allows:

- The Economy function enables the oven to maintain a lower temperature when not in active use compared to when it's in operation. This feature conserves energy, leading to cost savings. Additionally, it controls the movement of the wire mesh conveyor, serving a dual purpose beyond just temperature management.

Conveyor:

- Adjustable speed conveyor belt all the way to a complete halt. The dashes on the display move top to bottom simulating its movement

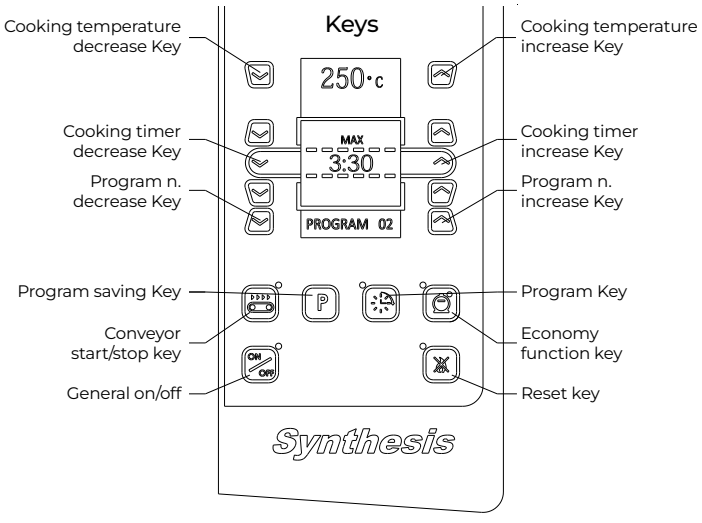

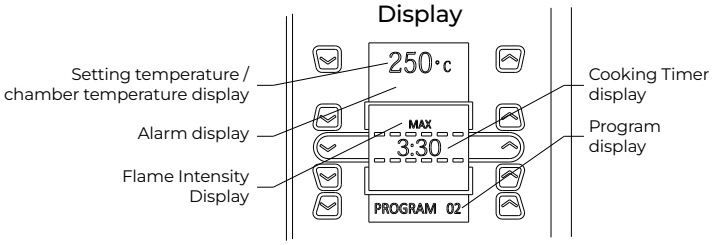

DATA SHEET

Zanolli Synthesis 06/40G-2 Double Deck 16 Inch Gas Impingment Conveyor Oven

1SV4407C-2 ☐ LPG ☐ NAT

Technical specifications

External Size

External Width	1300mm
External Depth	1050mm
External Height	880mm

Cooking Chamber size

Internal Width	580mm
Internal Depth	400mm
Internal Height	95mm

Conveyor Belt Size

Conveyor Width	1070mm
Conveyor Depth	400mm

Weight

Net weight	115 kg x 2
package weight	*

Exhaust

Air exchange	31 m3 /h
Flame control	Electronic without pilot

Recomemded Clearances

Minimum clearance	Left	Rear	Right
Standard	200mm	200mm	200mm

Operating Environment

Temperature	0 - 40 °c
Maximum humidity	95% without condensation
Noise	< 70 decibels

Operation

Belt speed	1.45min - 30min
Maximum Temperature	320°c

Warranty

2 Year Warranty	2 years parts and labour

**Subject to a prevanttitive maintence plan*

Gas & Electircal Specification Per Oven

Connection requirements electric

Electrical connected loads	450 Watts
Voltage	240V
Plug Supplied	Yes, 10 amps
Cable Length	2m

Connection requiring Gas

Gas Pipe	1/2 " Male threaded tail

Injector Diameter

NAT gas	3 x 1.55mm
Universal LPG	3 x 0.9mm

Low flame gas pressure

NAT Gas	3 mbar	0.3 kpa
Universal LPG	8 mbar	0.8 kpa

High flame gas pressure

NAT Gas	10 mbar	1 kpa
Universal LPG	27.5 mba	2.75kpa

Thermal capacity

High flame	32.4 Mj/hr
Low flame	17.2 Mj/hr

High Flame consumption

NAT Gas	0,952 m3 /h
Universal LPG	0,71 Kg/h

Low Flame consumption

NAT Gas	0.476 m3 /h
Universal LPG	0.352 Kg/h

DATA SHEET

Zanolli Synthesis 06/40G-2 Double Deck 16 Inch Gas Impingment Conveyor Oven

1SV4407C-2 ☐ LPG ☐ NAT

Options

☐

Micromesh belt - 6mm	
SKU	--

☐

Right to left Belt configuration	
SKU	--

☐

High speed conveyor belt gearbox	
SKU	--

☐

Stand suited for Single/Double deck configuration	
SKU	0SV2A14
Size	765 x 580 x 630
Weight	30kg

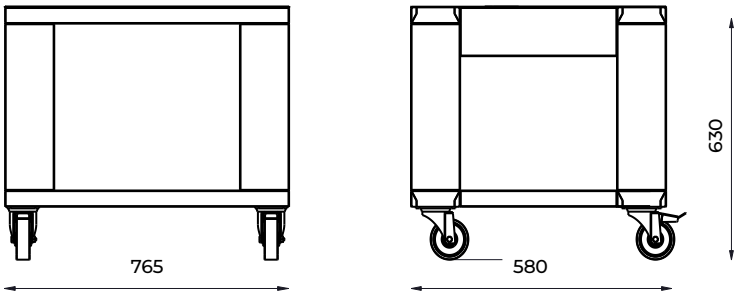

☐

Stand suited for triple deck configuration	
SKU	0SV2A15
Size	765 x 580 x 400
Weight	23.5kg

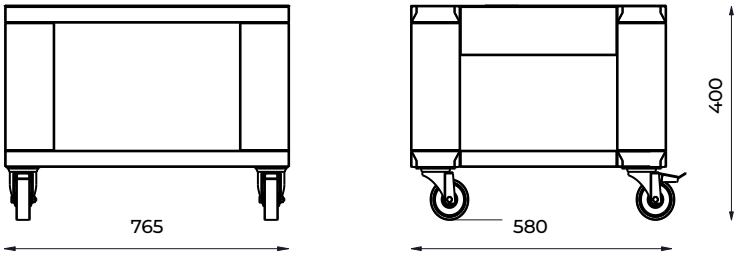

DATA SHEET

Zanolli Synthesis 06/40G-2 Double Deck 16 Inch Gas Impingment Conveyor Oven

1SV4407C-2 ☐ LPG ☐ NAT

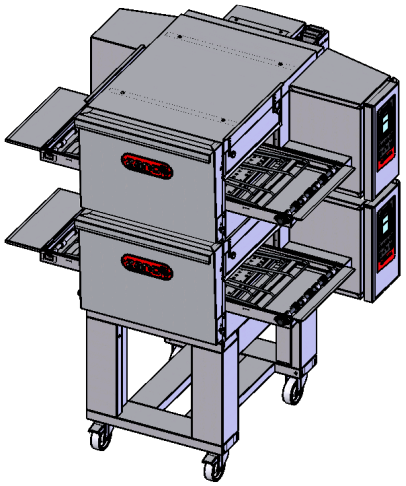

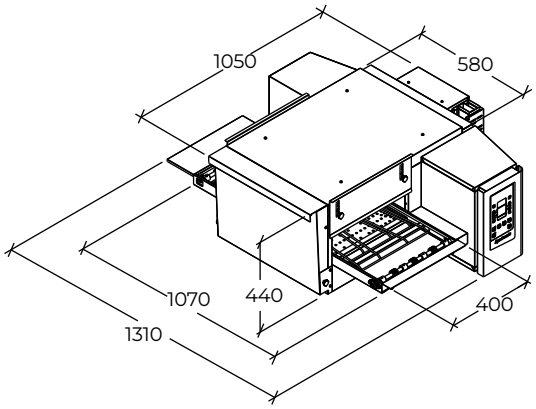

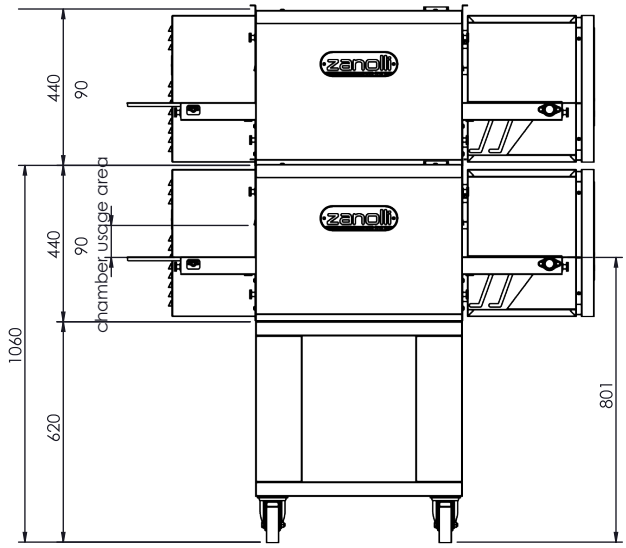

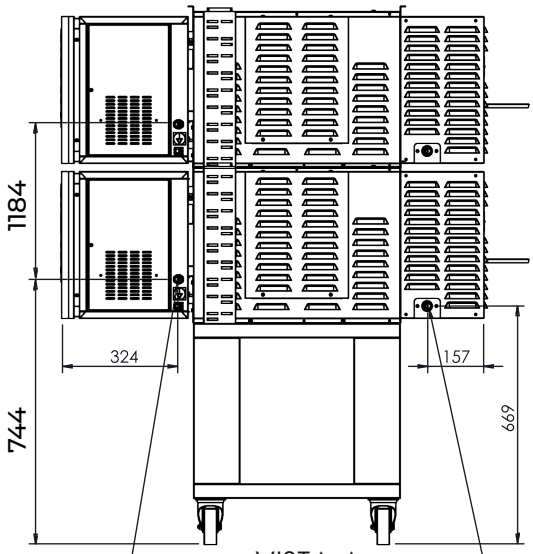

VISTA A
SCALA 1 : 18

power supply entry

gas supply entry

