DATA SHEET

Zanolli Synthesis 05/40E-3 Triple Deck
16 Inch Electric Impingment Conveyor Oven

2SV4206B-3



Build

- Built entirely in stainless steel
- Easy access for thorough cleaning and hygiene
- In built cooling system for all external parts ensures oven is cool to touch and work with.
- Heavy duty construction with reliable and durable components.
- Stackable up to 3 units.
- Optional Heavy duty stand

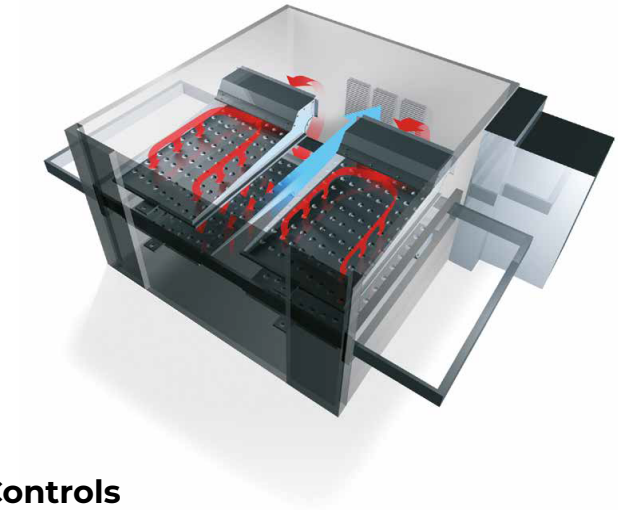

Impingment technology

- Maximum silence of the mesh conveyor system and ventilation motors.
- Latest advancements in air impingement technology allow for rapid heating & cooking of all foods consistently at all times.
- The piercing jets of hot turbulent air encompass every part of the oven delivering exceptional results every time.

Controls

- BRP (power regulation) system reaches working temperature in 20 minutes
- Balanced temperature detection system managed via dual oven probes.
- Maximum cooking temperature up to 320 °C

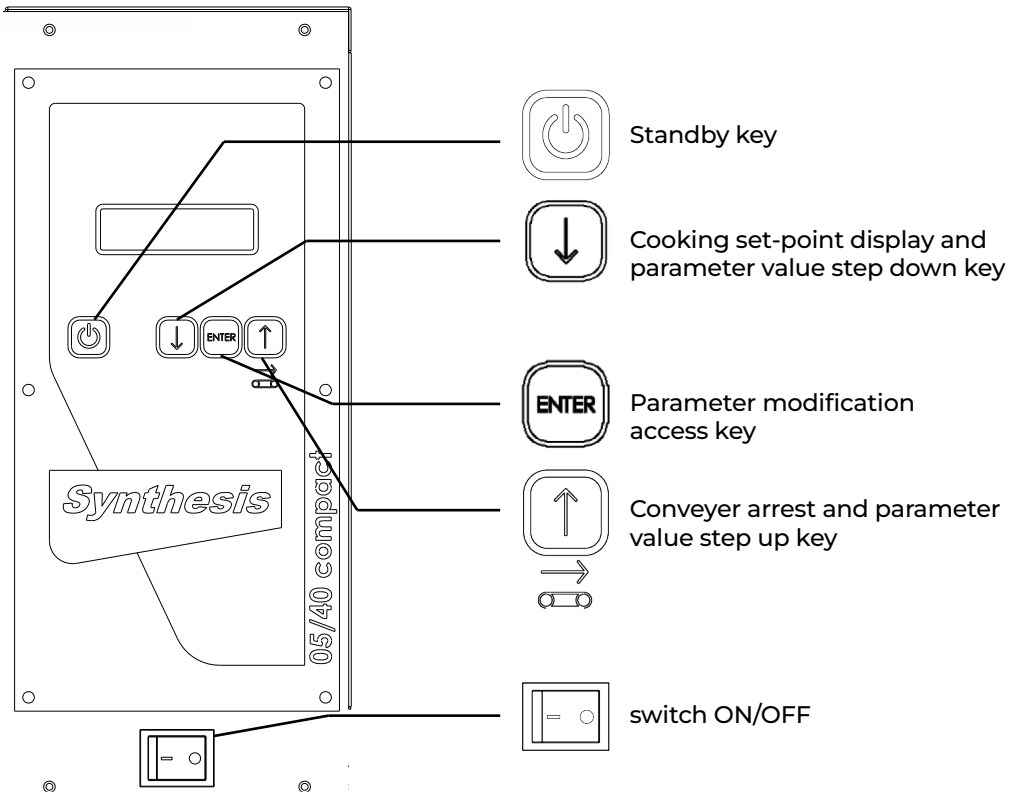

DATA SHEET

Zanolli Synthesis 05/40E-3 Triple Deck 16 Inch Electric Impingment Conveyor Oven

2SV4206B-3

Technical specifications

External Size

External Width	1270mm
External Depth	800mm
External Height	1170mm

Cooking Chamber size

Internal Width	570mm
Internal Depth	400mm
Internal Height	90mm

Conveyor Belt Size

Conveyor Width	1070mm
Conveyor Depth	400mm

Weight

Net weight	77 kg x 3
package weight	*

Connection requirements electric

Total electrical power	6.3kW x 3

Electrical Supply Current (per oven)

Voltage	415V or 240V upon request
Current at 380-415 V 3N~	13 A

Cable and Lead

Plug Supplied	No
Cable Length	2m
Wire section	4/10 mm2
Electrical connection	Plugless 5 lead cable

Recommended Clearance

Minimum clearance	Left	Rear	Right
Standard	200mm	200mm	200mm

Operating Environment

Temperature	0 - 40 °c
Maximum humidity	95% without condensation
Noise	< 70 decibels

Operation

Conveyor Belt speed	2 - 30 min / Halt
Maximum Temperature	320°c

Warranty

2 Year Warranty	2 years parts and labour

**Subject to a prevanttitive maintence plan*

DATA SHEET

Zanolli Synthesis 05/40E-3 Triple Deck
16 Inch Electric Impingment Conveyor Oven

2SV4206B-3

Options

☐

Micromesh belt - 6mm	
SKU	--

☐

Right to left Belt configuration	
SKU	--

☐

High speed conveyor belt gearbox	
SKU	--

☐

Stand suited for triple deck configuration	
SKU	0SV2A18
Size	690 x 530 x 445
Weight	16kg

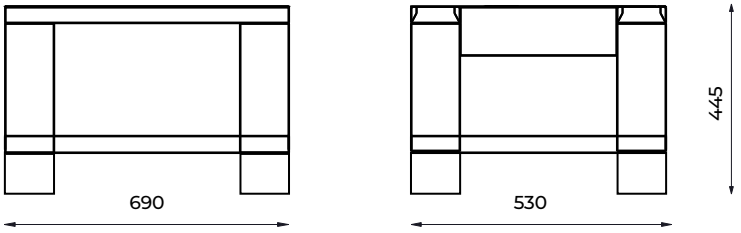

DATA SHEET

Zanolli Synthesis 05/40E-3 Triple Deck
16 Inch Electric Impingment Conveyor Oven

2SV4206B-3

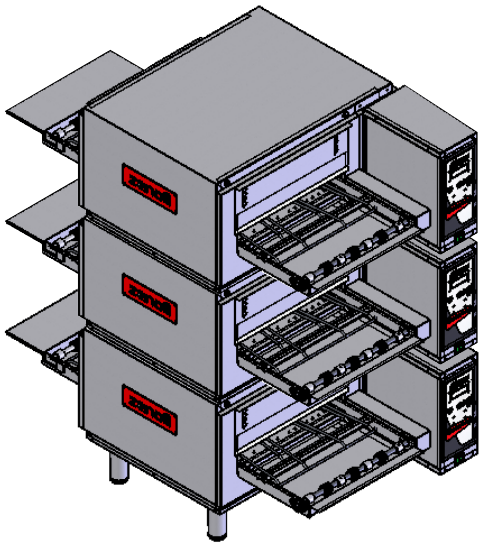

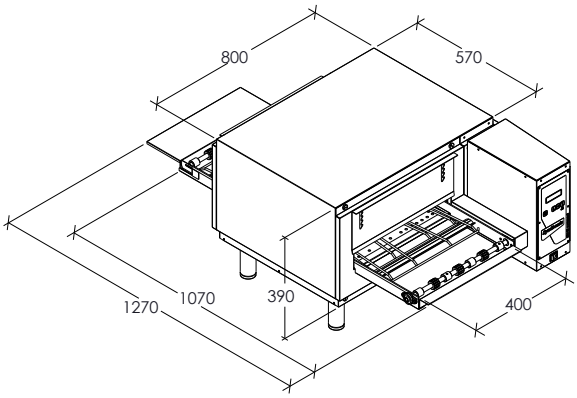

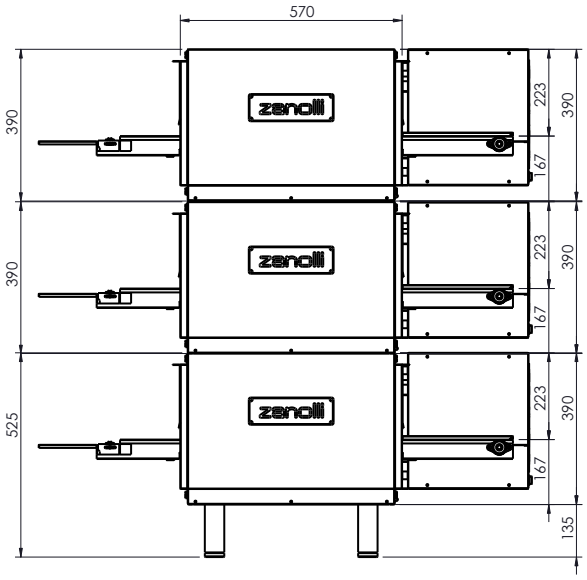

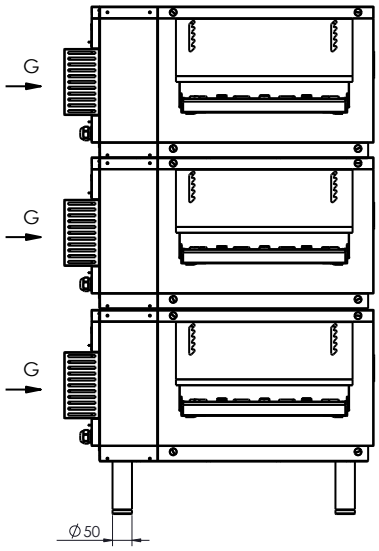

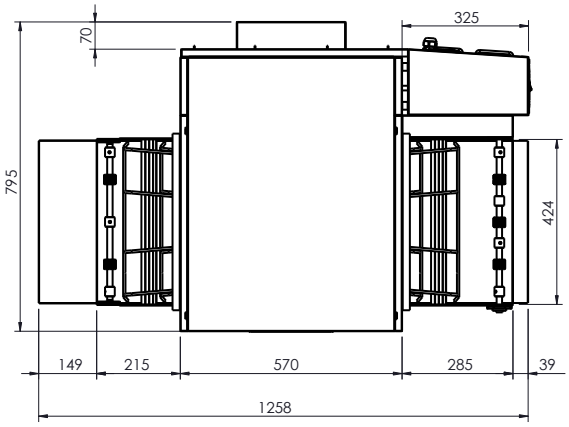

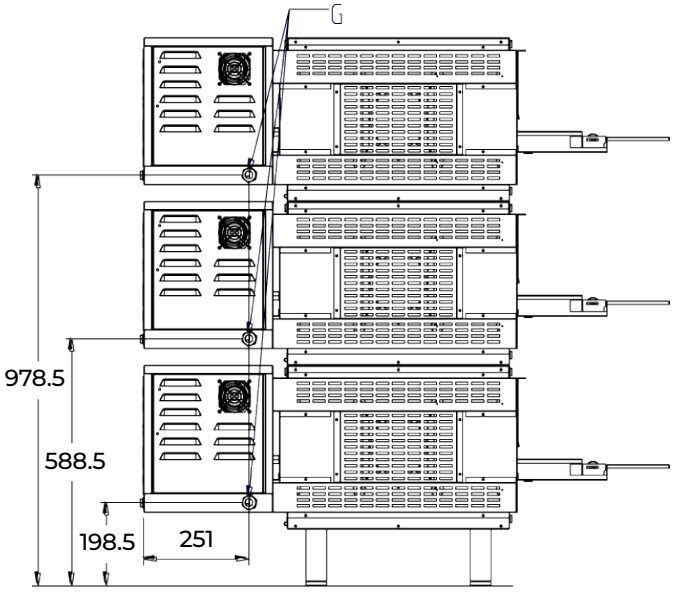

G	Entry point for power supply