SIRIO 600/1000
FREESTANDING DOUGH SHEETERS

COMIDA

Main Features

- Digital display to show the rolling thickness and ensure the most accurate adjustments
- Possibility of inverting the rolling direction by means of joystick and foot pedal
- The sydnchornized speed of the conveyor belts are fixed at a single speed.
- Removable flour tray for easy cleaning
- The plates can be closed, thus allowing to keep the machine size smaller, when not in use
- The machines are mounted on wheels for their easy displacement





SPECIFICATIONS

Voltage	400Vac 3 50Hz
Power	0.75kw
Speed	Single Speed
Weight	229kg
Plug Supplied	No
Belt Length	1000mm Each Side
Belt width	600mm
Noise Level	< 70 decibels
Humidity	95% without condensation
Ambient Temperature	40°C Max

STANDARD - Single Speed Operation



OPTIONAL VARIABLE SPEED - Single Phase Operation



DIMENTIONS

External Width	2490mm
External Depth	1090mm
External Height	1300mm

FRONT

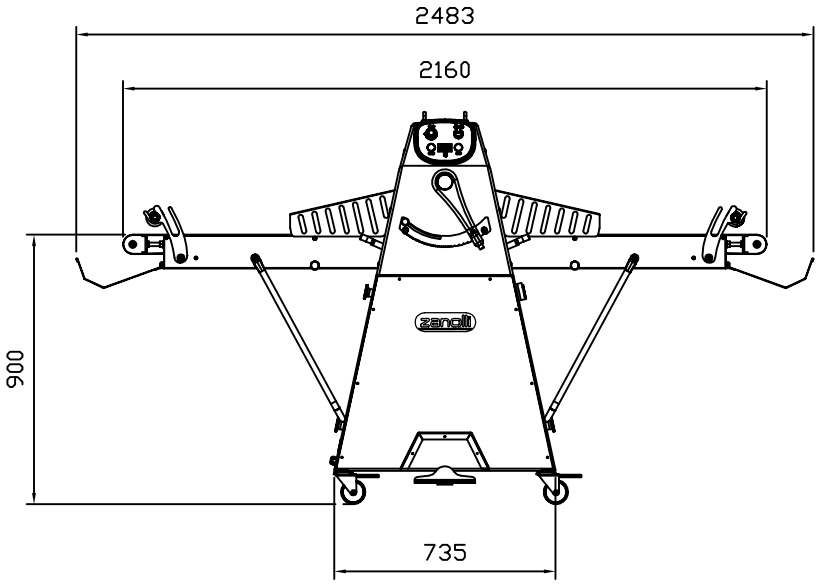

SIDE

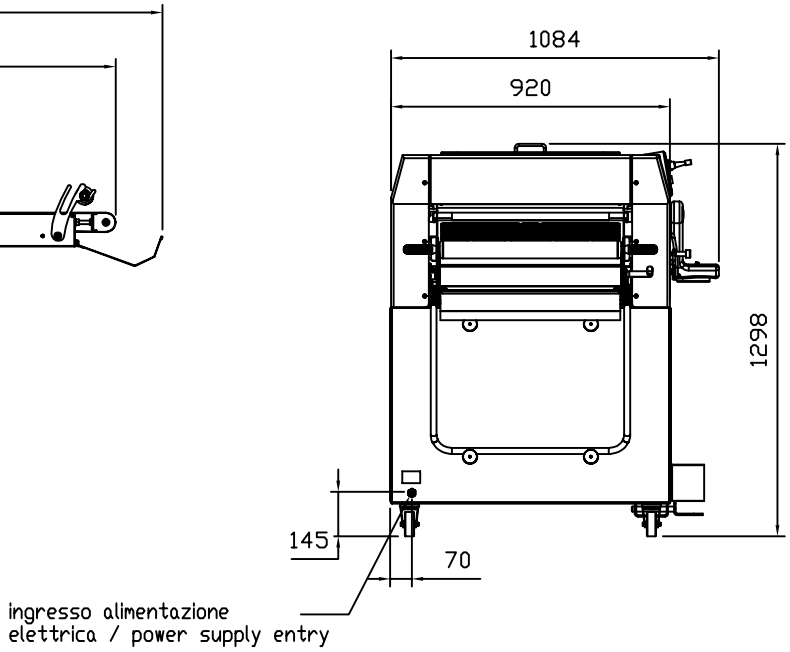

TOP

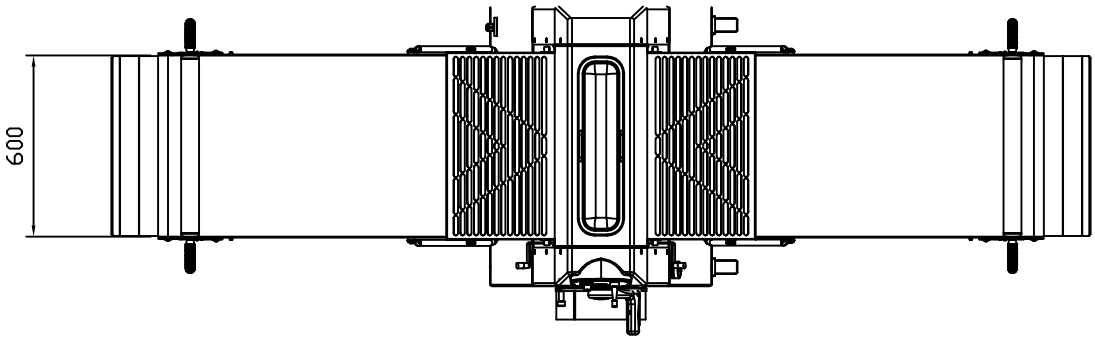

We reserve the right to alter specifications without notice.