SIRIO 500B
BENCHTOP DOUGH SHEETER

COMIDA

Main Features

- Digital display to show the rolling thickness and ensure the most accurate adjustments
- Possibility of inverting the rolling direction by means of joystick and foot pedal
- The sydnchornized speed of the conveyor belts are fixed at a single speed.
- Removable flour tray for easy cleaning
- The plates can be closed, thus allowing to keep the machine size smaller, when not in use



SPECIFICATIONS

Voltage	400Vac 3 50Hz
Power	0.5kw
Speed	Single Speed
Weight	126kg
Plug Supplied	No
Belt Length	850mm Each Side
Belt width	500mm
Noise Level	< 70 decibels
Humidity	95% without condensation
Ambient Temperature	40°C Max

STANDARD - Single Speed Operation



OPTIONAL VARIABLE SPEED - Single Phase Operation



DIMENTIONS

External Width	2120mm
External Depth	940mm

FRONT

SIDE

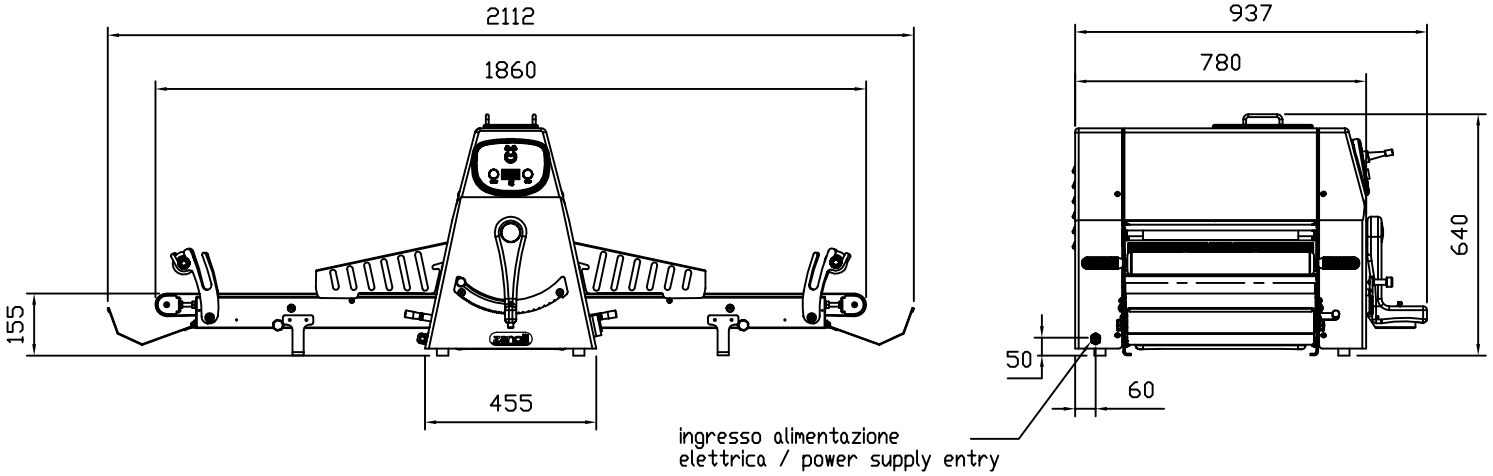

TOP

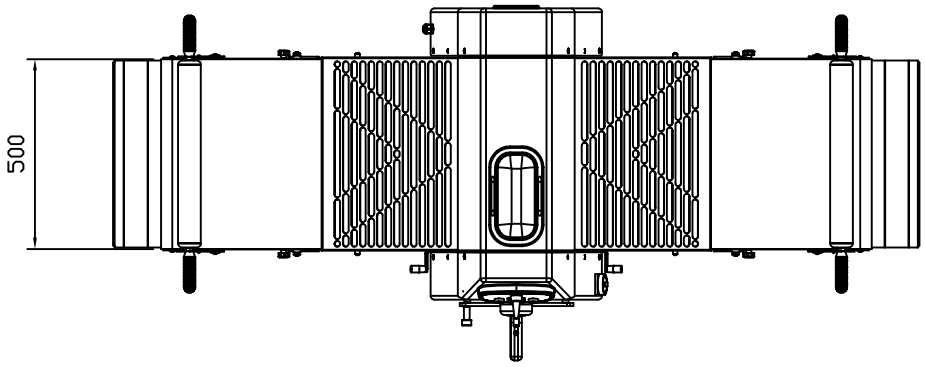

We reserve the right to alter specifications without notice.