ROTOR WIND 3E

15/18 TRAY ELECTRIC ROTATING BAKING OVEN (LONG VERSION)

5RW0300

Main Features



The Air Flow crosses a Group of armor plated Heating Elements laid out in order to ensure an OptimalPerformance of the Oven.

- 15/18 Tray Capacity (400 x 600)
- High Production
- Steam Exhaust Fan
- Extractable trolley for which makes it easier to use
- Front surface and Baking Chamber Completely in Stainless steel.
- Electromechanical Control Panel which enables the control of:
  - (a) Temperature
  - (b) Ventilation
  - (c) Rack Rotation
  - (d) Supply of Steam
  - (e) Baking Timers
  - (f) shut down/start ups
  - (f) Lighting control
- New steam generator embraced in the ventilation area ensures steam is spread inside the chamber in a very homogenous way through the ventilation system.

SPECIFICATIONS

Voltage	400 V 3 Phase
Power	23.5 kw
Weight	650 kg
Plug Supplied	No
Capacity	15/18 Trays x (600 x 400)
Thermostat	300°C
Baking Volume	3.6 - 4.3 m^2

ACCESORIES

Trolleys 15 Tray (400 x 600)	Computerized Panel
Trolleys 18 Tray (400 x 600)	Variable Speed System for Exhaust
Turn Table Rotation Option as opposed to Standard Hooking system	

DIMENTIONS

External Width	980mm
External Depth	1750mm

FRONT

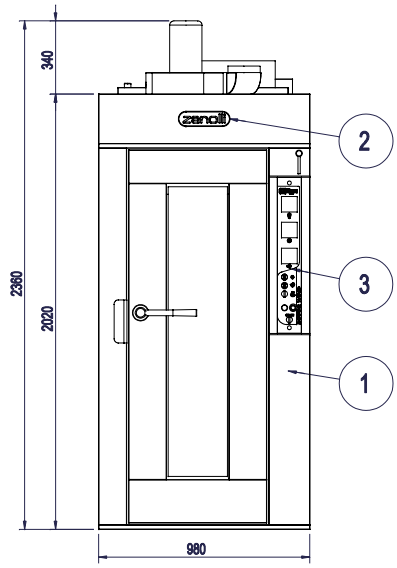

Num. articolo	Quantità	Descrizione
1	1	ROTOR WIND 3E (2016)
2	1	PANN0370
3	1	PANN0560

SIDE

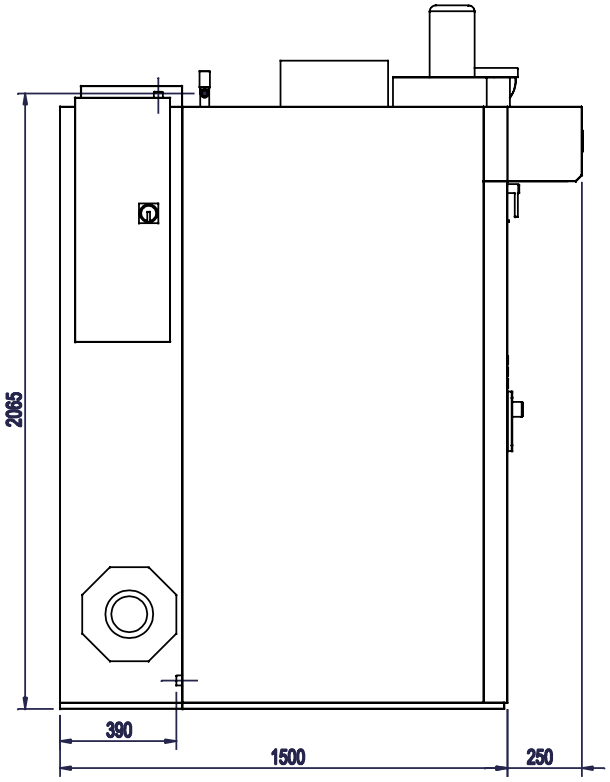

TOP

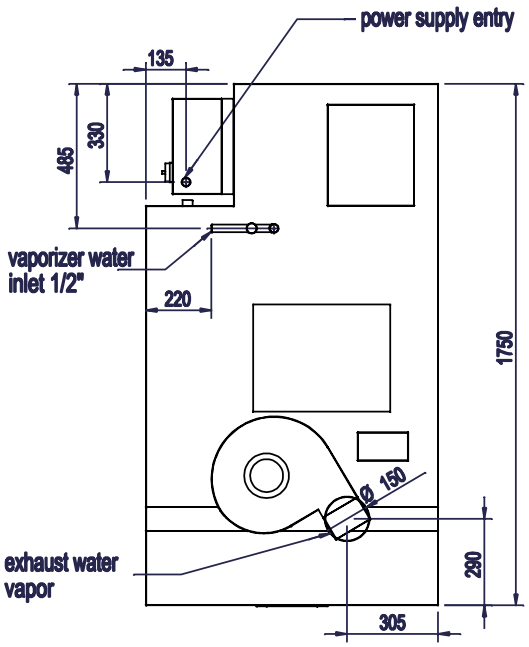

REAR

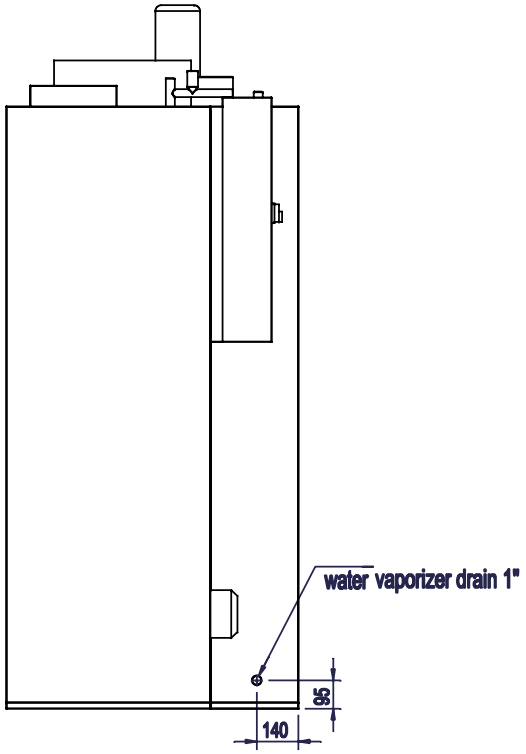

We reserve the right to alter specifications without notice.