ROTOR WIND 1E
8 TRAY ELECTRIC ROTATING BAKING OVEN WITH PROVER
5RW0100

Main Features



The Air Flow crosses a Group of armor plated Heating Elements laid out in order to ensure an OptimalPerformance of the Oven.

- 8 Tray Capacity (400 x 600)
- High Production
- Steam Exhaust Fan
- Front surface and Baking Chamber Completely in Stainless steel.
- Electromechanical Control Panel which enables the control of:
  - (a) Temperature
  - (b) Ventilation
  - (c) Rack Rotation
  - (d) Supply of Steam
  - (e) Baking Timers
  - (f) shut down/start ups
  - (f) Lighting control
- New steam generator embraced in the ventilation area ensures steam is spread inside the chamber in a very homogenous way through the ventilation system.

Prover

5 Tray Prover with Humification (400 x 600)

SPECIFICATIONS

Voltage	400 V 3 Phase
Power	13 kw
Weight	350 kg
Plug Supplied	No
Capacity	Rotor Oven 8 x (400 x 600) Rotor Prover 5 x (400 x 600)
Thermostat	300°C
Baking Volume	1.9 m^2

ACCESORIES

Computerized Panel
Variable Speed System for Exhaust

DIMENTIONS

External Width	920mm
External Depth	1240mm

FRONT

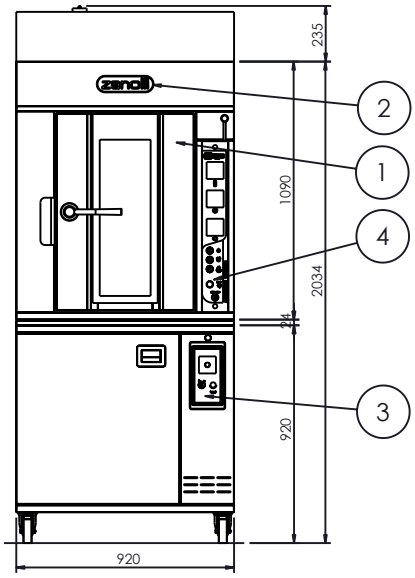

Num. articolo	Quantità	Descrizione
11		ROTOR WIND 1E
21		PANN0370
31		PANN0564
41		PANN0560

SIDE

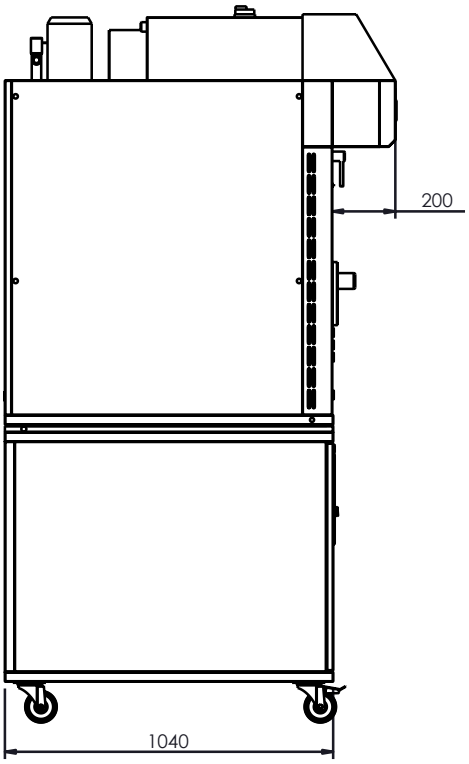

TOP

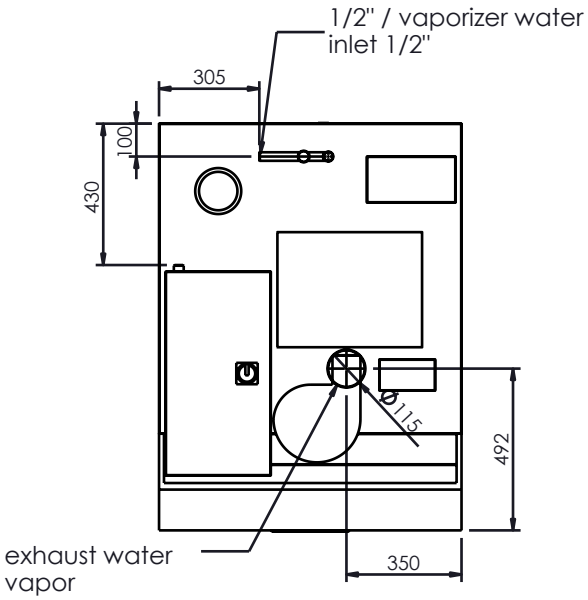

REAR

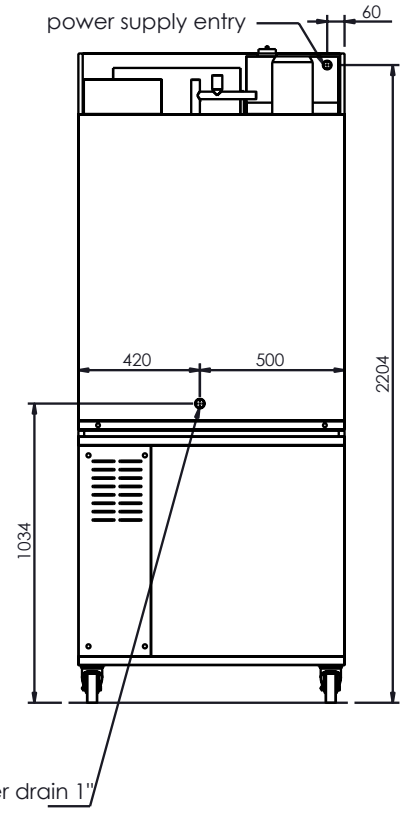

We reserve the right to alter specifications without notice.