GALASSIA PN120
BAKERY DOUGH MIXERS

COMIDA

Main Features



- Fitted with 2 Independent motors
- 2 speeds on spiral tool
- Easy dough extraction thanks to the bowl jog push-button
- Stainless steel bowl, spiral tooland breaking column
- If the moveable protection is opened, the machine comes to a halt, thanks to the activation of a micro switch
- The forged acle, positioned under the head cover rotates the spiral
- A rotating spiral amalgamates mixes, refines and oxygenates the dough in the bowl
- The bowl constantly draws new dough under the spiral to be worked
- The machine is provided with three wheels, two fixed back wheels and one at the front

SPECIFICATIONS

Voltage	400Vac 3 50Hz
Power	5.75kw
Speeds	2 speeds
Power of Spiral Tool	2.06kw / 4.8kw
Power of Bowl Motor	0.55kw
Weight	505 kg
Plug Supplied	No
Bowl Capacity	188 litres
Bowl Dimensions	750mm x 480 mm
Dry Flour Capacity	75 kg
Min Hydration	50%
Min/Max Finished Dough	8kg - 120kg

BREAKING COLUMN WITH FOOT FOR WELL HYDRATED DOUGH MIXTURES





DIRECT SPIRAL TRANSMISSION

DIMENTIONS

External Width	770mm
External Depth	1250mm
External Height	1500mm

FRONT

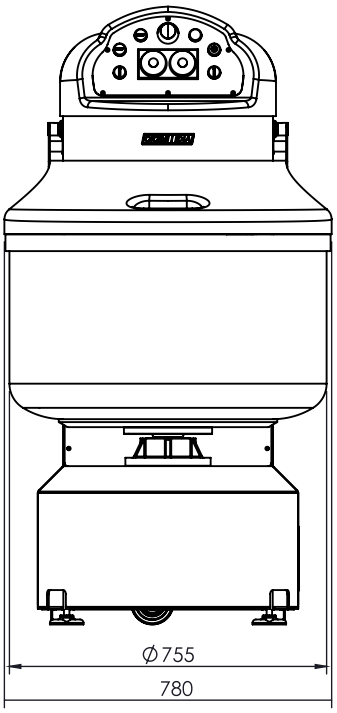

SIDE

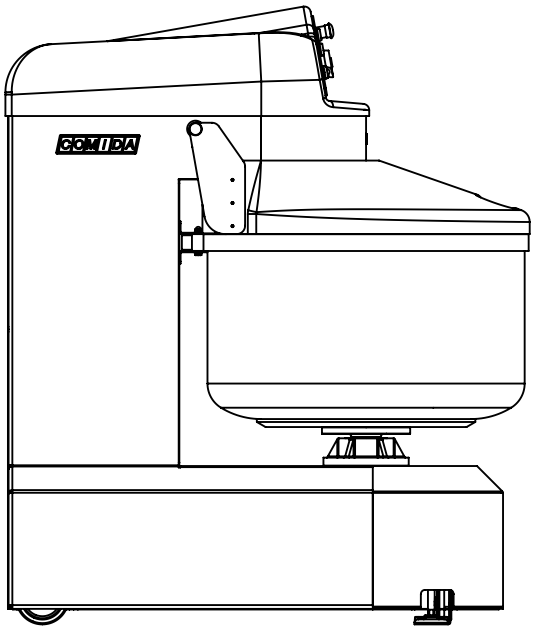

TOP

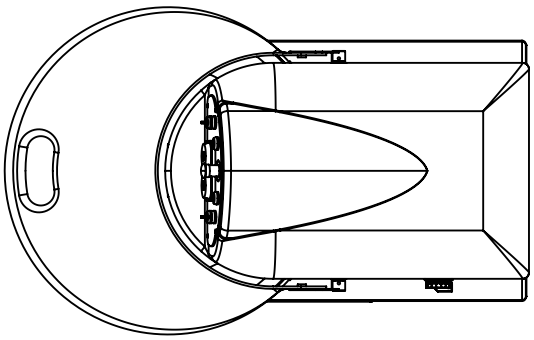

SIDE

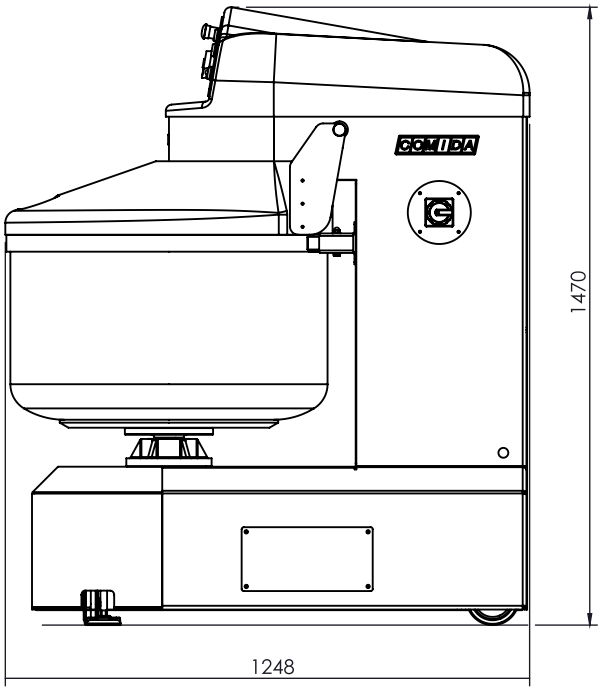

We reserve the right to alter specifications without notice.