# GALASSIA PN80
BAKERY DOUGH MIXERS

COMIDA

## Main Features

- Fitted with 2 Independent motors
- 2 speeds on spiral tool
- Easy dough extraction thanks to the bowl jog push-button
- Stainless steel bowl, spiral tooland breaking column
- If the moveable protection is opened, the machine comes to a halt, thanks to the activation of a micro switch
- The forged acle, positioned under the head cover rotates the spiral
- A rotating spiral amalgamates mixes, refines and oxygenates the dough in the bowl
- The bowl constantly draws new dough under the spiral to be worked
- The machine is provided with three wheels, two fixed back wheels and one at the front



## SPECIFICATIONS

| | |
|---|---|
| Voltage | 400Vac 3 50Hz |
| Power | 5.35kw |
| Speeds | 2 speeds |
| Power of Spiral Tool | 2.06kw / 4.8kw |
| Power of Bowl Motor | 0.55kw |
| Weight | 350 kg |
| Plug Supplied | No |
| Bowl Capacity | 131 litres |
| Bowl Dimensions | 670mm x 380mm |
| Dry Flour Capacity | 50kg |
| Min Hydration | 50% |
| Min/Max Finished Dough | 5kg - 80kg |

BREAKING COLUMN WITH FOOT FOR WELL HYDRATED DOUGH MIXTURES





DIRECT SPIRAL TRANSMISSION

## DIMENTIONS

| | |
|---|---|
| External Width | 690mm |
| External Depth | 1120mm |
| External Height | 1400mm |

## FRONT

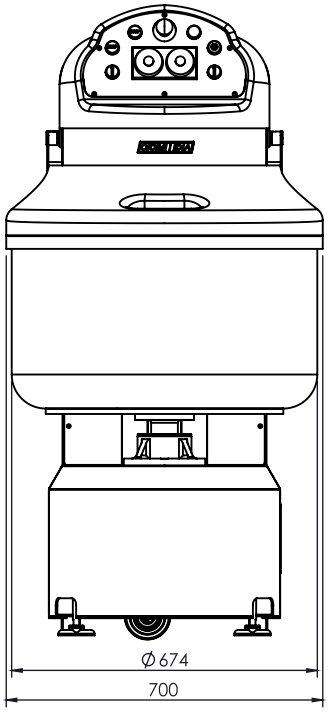


## SIDE

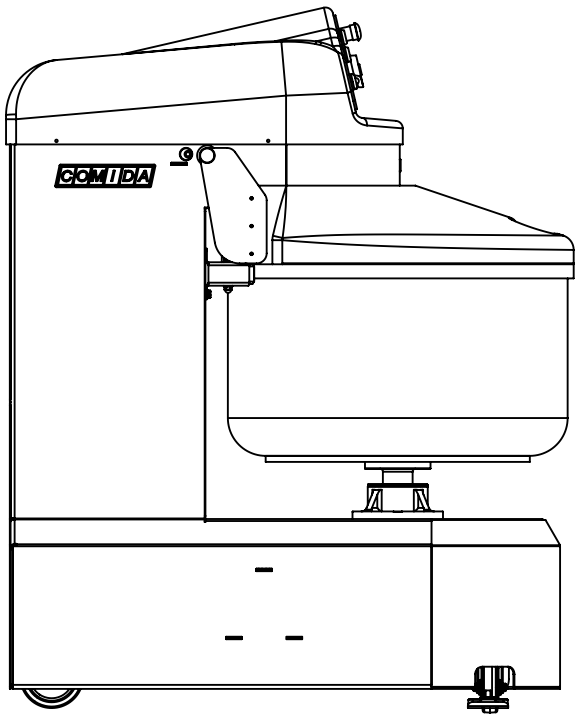


## TOP

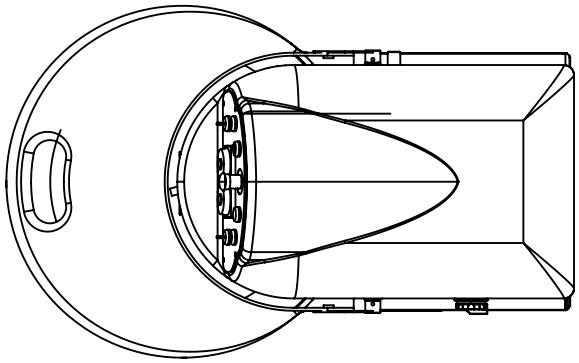

## SIDE

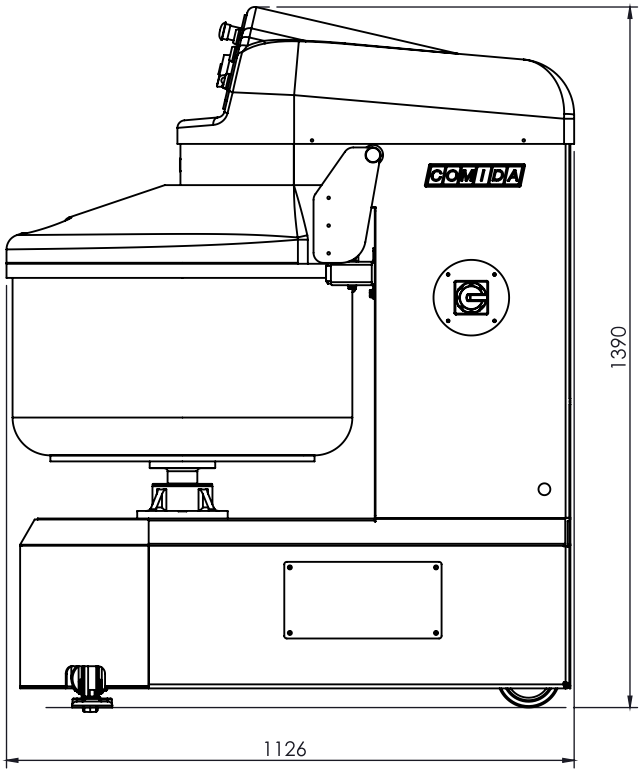


We reserve the right to alter specifications without notice.