# GALASSIA 25 S

HEAVY DUTY 32 LITRE SPIRAL DOUGH MIXER (TWO SPEED)

4IM2007

## GALASSIA 25S

### 25 KG FIXED HEAD/FIXED BOWL DOUGH MIXER

The Galassia range of spiral kneading machines are exceptionally built and engineered. Since 1977, they have earnt a reputation for their robust and simple design that exceeds the demands of the modern pizzeria and baker.

Fitted with a stainless steel spiral, resistant to even the most strenuous forces and a heavy gauge stainless steel rotating bowl, its powers through the toughest mixes to produce soft and oxygenated dough that praises the highest of traditions.

The Galassia is capable of kneading up to to 25kg of dough at any given time. Given its two Speed 3 phase Motor, it can effectively knead a wider range of doughs with precision and versatility.

Built with a superior chain transmission for a long lasting work life, it is also constructed with multiple reinforced spiral hook chain drives that guarantee superior performance and strength under resistance. The Galassia spiral dough mixer range are suitable for a working dough of 55% hydration.

### MAIN CHARACTERISTICS

- Spiral in stainless steel, durable and resistant to even the most strenuous forces
- Reinforced Heavy gauge stainless steel kneading bowl absorbs kneading shocks easily.
- Chain drive transmission allows for a longer life and greater durability.
- Heavy duty painted steel chassis and welded structure finished with a stainless Steel top.
- Multiple reinforced chain drives operate the spiral kneading hook providing extra needed durability and strength during the toughest mixes.
- Easy adjustment of transmission belt tensions through user friendly adjustment controls ensuring easy serviceability and access.
- Heavy duty lockable castors
- Emergency Stop Button
- Timer controlled alongside user friendly electromechanical controls.
- 3 phase Motor and 2 speed operation provides extra versatility.
- Fixed head and fixed bowl.
- Mobile guard in clear transparent ABS allowing perfect vision and monitoring of the mix at all times.




## DIMENSION

| | |
|---|---|
| Dimensions WxDxH (mm) without wheels | 420 X 735 X 646 |
| Dimensions WxDxH (mm) with wheels | 420 X 735 X 701 |

## OPTIONS

| | |
|---|---|
| Galassia 25 VAR - Variable speed, 230Vac 1N 50Hz | 4IM2012 |
| Galassia 25 - Single speed, 230Vac 1N 50Hz | 4IM2006 |

## SPECIFICATIONS

| | |
|---|---|
| Max Dry Flour capacity | 16kg |
| Max Finished dough capacity | 25kg |
| Hydration Water/Flour % | 55% |
| Bowl capacity | 32 litres |
| Dimensions of bowl | Ø 400 x 260 h |
| Voltage | three -phase, 400Vac 3 50Hz, supplied with no plug, lead only |
| Power | 1.1kw |
| Bowl speed | two speed at 12 rpm and 19 rpm |
| Spiral tool speed | two speed at 103 rpm and 160 rpm |
| Liftable head | No |
| Removable Bowl | No |
| Net Weight / Packing | 73kg |
| Noise level | <70 decibel |
| Color | White/Stainless Steel |
| Warranty | 2 years parts and labour |

# GALASSIA 25 S

HEAVY DUTY 32 LITRE SPIRAL DOUGH MIXER (TWO SPEED)

4IM2007

## FRONT

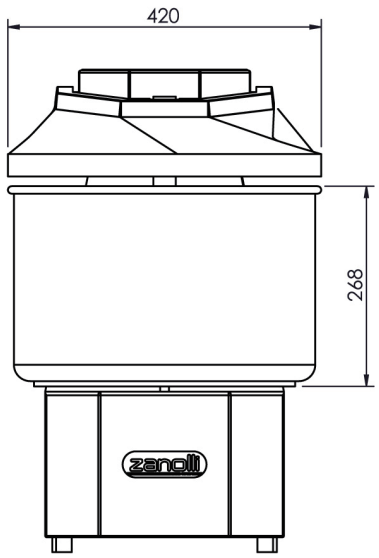


## SIDE

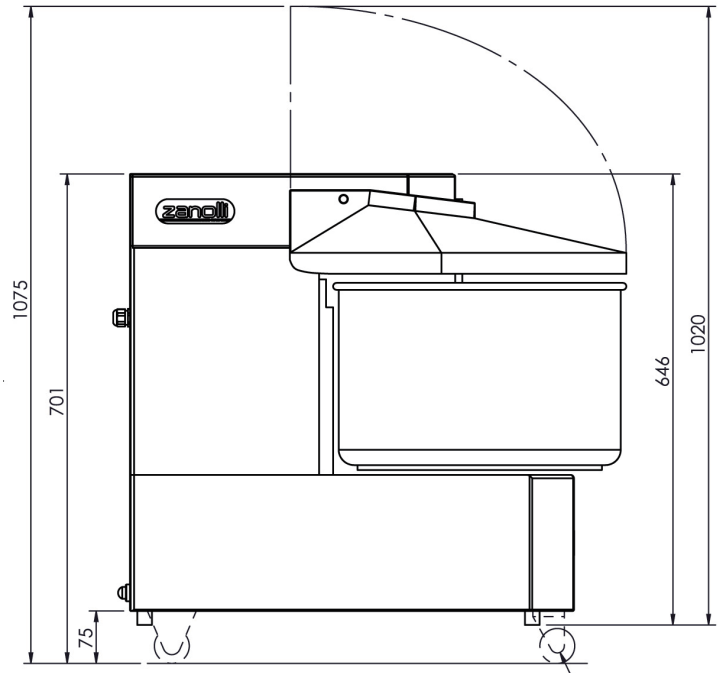


Wheel Kit: RUOT0019 (wheels without brake)

## TOP

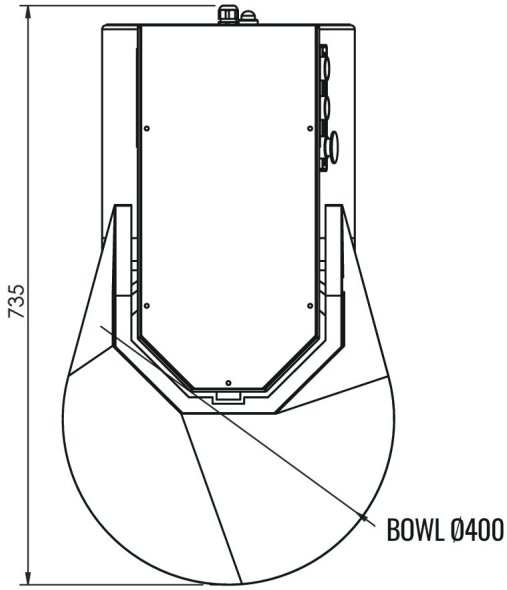


## REAR

