GALASSIA 25
HEAVY DUTY 32 LITRE SPIRAL DOUGH MIXER (SINGLE SPEED)
4IM2006

GALASSIA 25
25KG FIXED HEAD/FIXED BOWL DOUGH MIXER

The Galassia range of spiral kneading machines are exceptionally built and engineered. Since 1977, they have earnt a reputation for their robust and simple design that exceeds the demands of the modern pizzeria and baker.

Fitted with a stainless steel spiral, resistant to even the most strenuous forces and a heavy gauge stainless steel rotating bowl, its powers through the toughest mixes to produce soft and oxygenated dough that praises the highest of traditions.

The Galassia 25 is capable of kneading up to to 25kg of dough at any given time using its a single speed operation.

Built with a superior chain transmission for a long lasting work life, it is also constructed with multiple reinforced spiral hook chain drives that guarantee superior performance and strength under resistance. The Galassia spiral dough mixer range are suitable for a working dough of 55% hydration.

MAIN CHARACTERISTICS

- Spiral in stainless steel, durable and resistant to even the most strenuous forces
- Reinforced Heavy gauge stainless steel kneading bowl absorbs kneading shocks easily.
- Chain drive transmission allows for a longer life and greater durability.
- Heavy duty painted steel chassis and welded structure finished with a stainless Steel top.
- Multiple reinforced chain drives operate the spiral kneading hook providing extra needed durability and strength during the toughest mixes.
- Easy adjustment of transmission belt tensions through user friendly adjustment controls ensuring easy serviceability and access.
- Heavy duty lockable castors
- Emergency Stop Button
- Timer controlled alongside user friendly electromechanical controls.
- Single speed operation of bowl and spiral hook.
- Fixed head and fixed bowl.
- Mobile guard in clear transparent ABS allowing perfect vision and monitoring of the mix at all times.



SPECIFICATIONS

Max Dry Flour capacity	16kg
Max Finished dough capacity	25kg
Hydration Water/Flour %	55%
Bowl capacity	32 litres
Dimensions of bowl	Ø 400 x 260 h
Voltage	single -phase, 230Vac 1N 50Hz, supplied with a 10 amp plug
Power	1.1kw
Bowl speed	Single Speed 19 RPM
Spiral tool speed	Single Speed 160 RPM
Liftable head	No
Removable Bowl	No
Net Weight / Packing	73kg
Noise level	<70 decibel
Color	White/Stainless Steel
Warranty	2 years parts and labour

DIMENSION

Dimensions WxDxH (mm) without wheels	420 X 735 X 646
Dimensions WxDxH (mm) with wheels	420 X 735 X 701

OPTIONS

Galassia 25 S - two speed, 3 phase 400Vac 3 50Hz	4IM2007
Galassia 25 VAR - Variable speed, 230Vac 1N 50Hz	4IM2012

GALASSIA 25

HEAVY DUTY 32 LITRE SPIRAL DOUGH MIXER (SINGLE SPEED)

4IM2006

FRONT

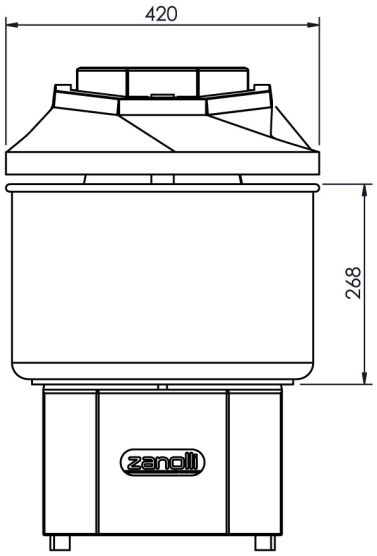

SIDE

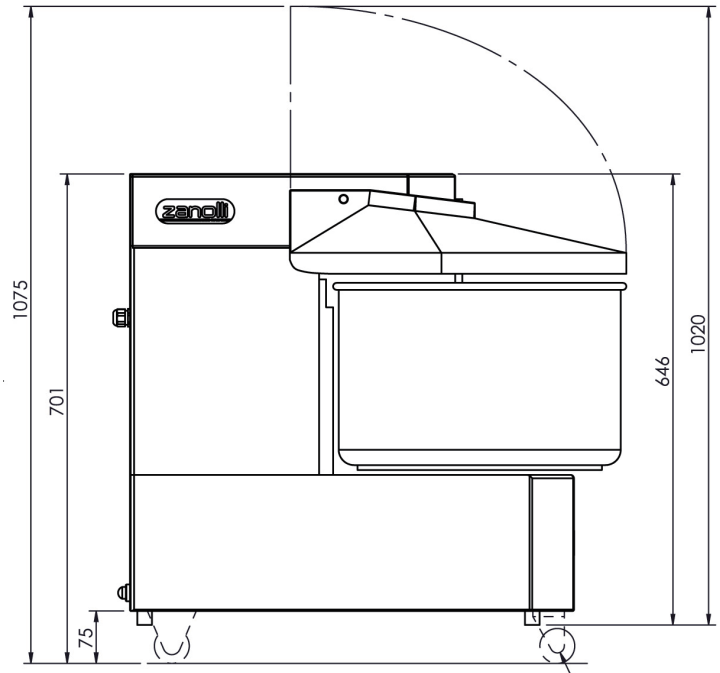

Wheel Kit: RUOT0019 (wheels without brake)

TOP

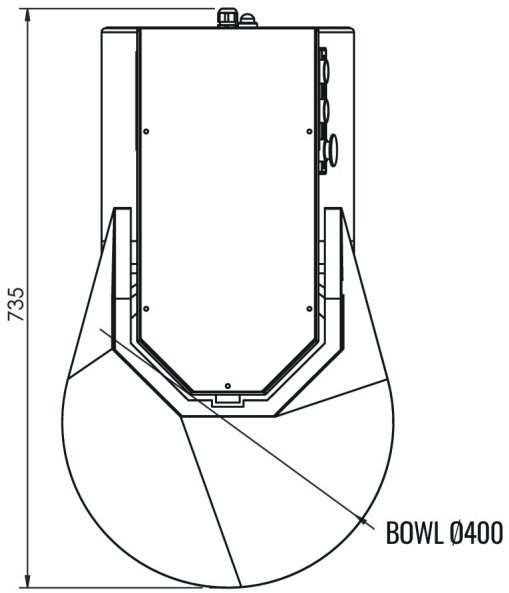

REAR

