GALASSIA 18 SPECIAL

HEAVY DUTY 23 LITRE SPIRAL DOUGH MIXER WITH LITFABLE HEAD (SINGLE SPEED)

4IM1508

GALASSIA 18 SPECIAL

18KG LIFTABLE HEAD / FIXED BOWL DOUGH MIXER

The Galassia range of spiral kneading machines are exceptionally built and engineered. Since 1977, they have earnt a reputation for their robust and simple design that exceeds the demands of the modern pizzeria and baker.

Fitted with a stainless steel spiral, resistant to even the most strenuous forces and a heavy gauge stainless steel rotating bowl, its powers through the toughest mixes to produce soft and oxygenated dough that praises the highest of traditions.

The Galassia 18 SPECIAL is capable of kneading up to to 18kg of dough at any given time using its a single speed operation. It is also designed with a single lever liftableable head for ease of cleaning and emptying the final product.

Built with a superior chain transmission for a long lasting work life, it is also constructed with multiple reinforced spiral hook chain drives that guarantee superior performance and strength under resistance. The Galassia spiral dough mixer range are suitable for a working dough of 55% hydration.

MAIN CHARACTERISTICS

- Spiral in stainless steel, durable and resistant to even the most strenuous forces
- Reinforced Heavy gauge stainless steel kneading bowl absorbs kneading shocks easily.
- Litable head mecahnism for ease of cleaning and emptying final product.
- Utilises a unique single lever to activate the liftable head.
- Chain drive transmission allows for a longer life and greater durability.
- Heavy duty painted steel chassis and welded structure finished with a stainless Steel top.
- Multiple reinforced chain drives operate the spiral kneading hook providing extra needed durability and strength during the toughest mixes.
- Easy adjustment of transmission belt tensions through user friendly adjustment controls ensuring easy serviceability and access.
- Heavy duty lockable castors
- Emergency Stop Button
- Timer controlled alongside user friendly electromechanical controls.
- Single speed operation of bowl and spiral hook.
- Mobile guard in clear transparent ABS allowing perfect vision and monitoring of the mix at all times.

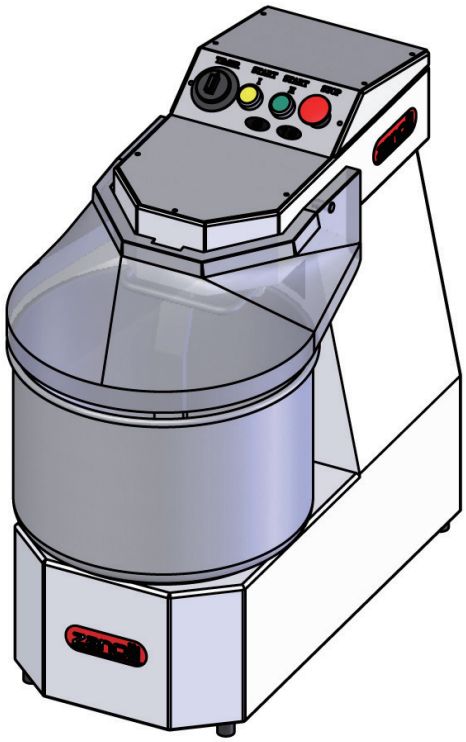

SPECIFICATIONS

Max Dry Flour capacity	11kg
Max Finished dough capacity	18kg
Hydration Water/Flour %	55%
Bowl capacity	23 litres
Dimensions of bowl	Ø 365 x 240 h
Voltage	single -phase, 230Vac 1N 50Hz, supplied with a 10 amp plug
Power	0.75kw
Bowl speed	Single Speed 20 RPM
Spiral tool speed	Single Speed 129 RPM
Liftable head	Yes
Removable Bowl	No
Net Weight / Packing	69kg
Noise level	<70 decibel
Color	White/Stainless Steel
Warranty	2 years parts and labour

DIMENSION

Dimensions WxDxH (mm) without wheels	385 X 702 X 701
Dimensions WxDxH (mm) with wheels	385 X 702 X 756

OPTIONS

Galassia 18S SPECIAL - two speed, 3 phase 400Vac 3 50Hz	4IM1509

GALASSIA 18 SPECIAL

HEAVY DUTY 23 LITRE SPIRAL DOUGH MIXER WITH LITFABLE HEAD (SINGLE SPEED)

4IM1508

FRONT

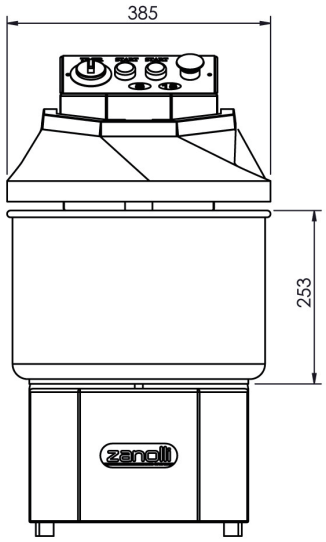

SIDE

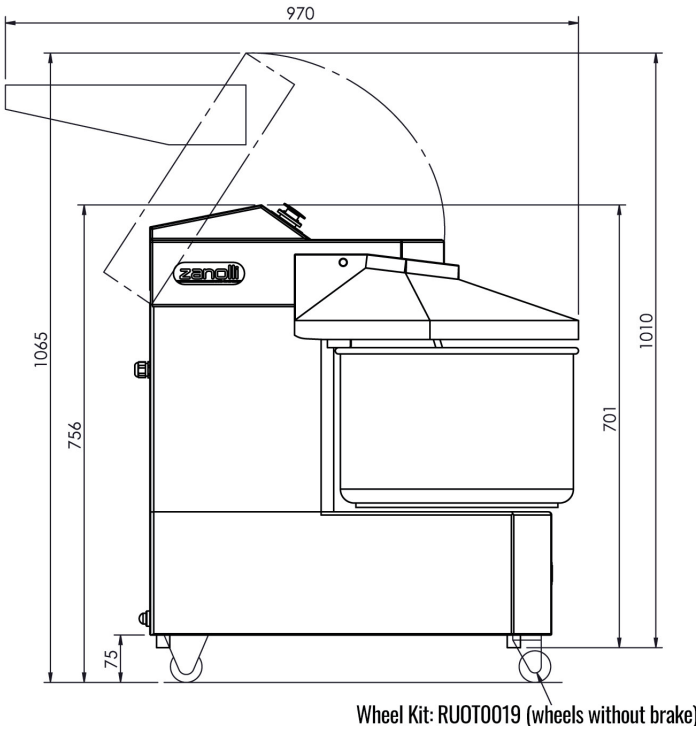

TOP

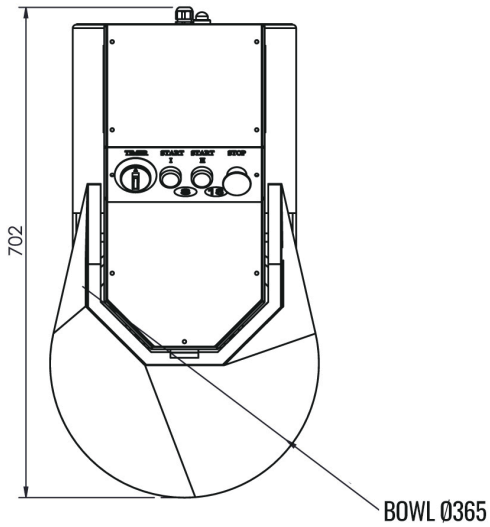

REAR

