ERACLE 80
TWIN ARM DOUGH MIXER

COMIDA

Main Features

Machines specifically designed for bakeries, pastry shops, confectionaries and pizza shops, suitable to workboth hard and soft dough, without heating it. The twin arms system allows for dough oxygenation, while also limiting heat and allowing for the homogenous distribution of suspended particles.

- Bowl, twin arms and protection grid are fully in stainless steel
- The twin arms simulate the movement of human arms working dough
- The arms are moved by oil-im-mersed helical gears, which rotate in clockwise direction
- The machines can be mounted on wheels if necessary
- All parts can be easily disassembled for servicing



SPECIFICATIONS

Voltage	400Vac 3 50Hz
Power	3.1 kw
Speed	2 speeds , Speed 1 - 42 RPM , Speed 2 - 62 RPM
Weight	625 kg
Plug Supplied	No
Bowl Capacity	140 Liters
Finished Dough	80 kg
Max Dry Flour	40 kg
Min Hydration	50%
Bowl Dimensions	655mm x 410mm

DIMENTIONS

External Width	750mm
External Depth	900mm

FRONT

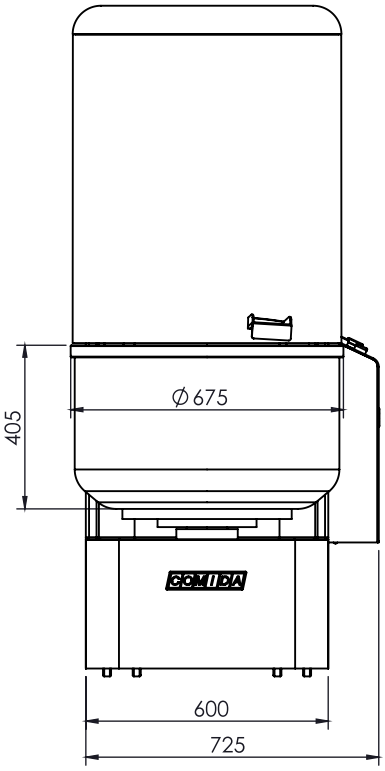

SIDE

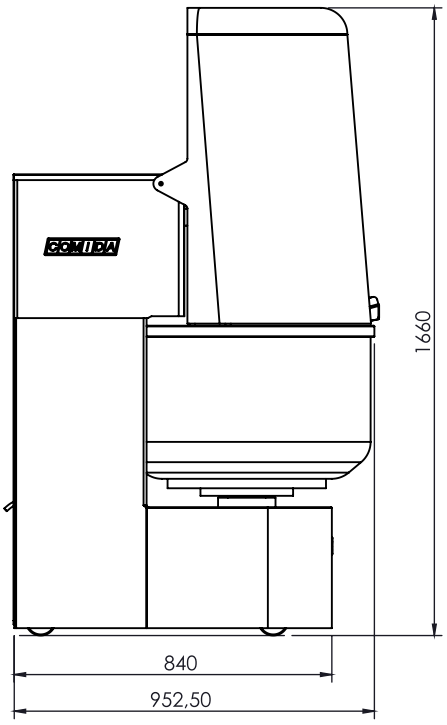

TOP

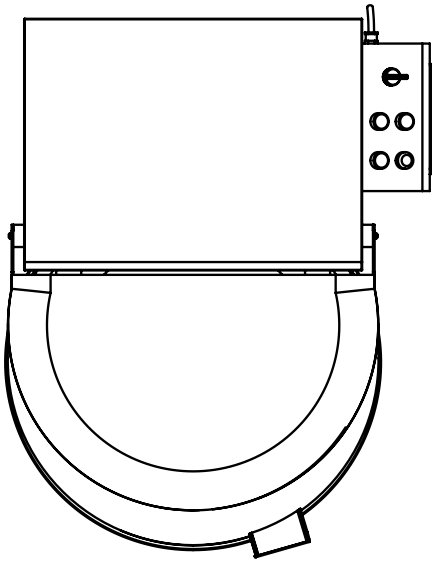

REAR

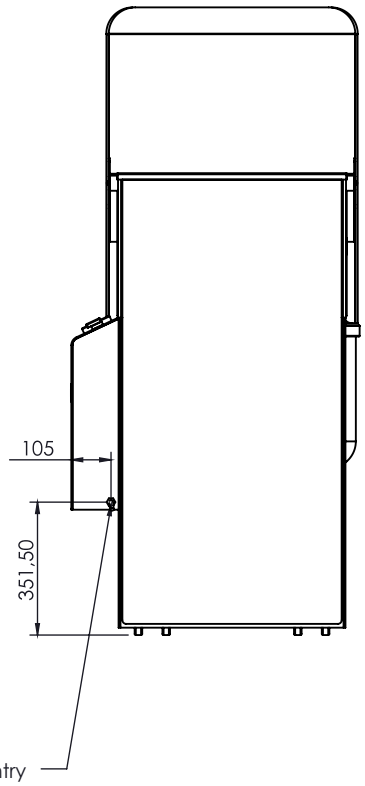

We reserve the right to alter specifications without notice.