ERACLE 60
TWIN ARM DOUGH MIXER

COMIDA

Main Features

Machines specifically designed for bakeries, pastry shops, confectionaries and pizza shops, suitable to workboth hard and soft dough, without heating it. The twin arms system allows for dough oxygenation, while also limiting heat and allowing for the homogenous distribution of suspended particles.

- Bowl, twin arms and protection grid are fully in stainless steel
- The twin arms simulate the movement of human arms working dough
- The arms are moved by oil-im-mersed helical gears, which rotate in clockwise direction
- The machines can be mounted on wheels if necessary
- All parts can be easily disassembled for servicing



SPECIFICATIONS

Voltage	400Vac 3 50Hz
Power	2.2 kw
Speed	2 Speed (1st Speed 42 RPM, 2nd speed 62 RPM)
Weight	415 kg
Plug Supplied	No
Bowl Capacity	80 Liters
Finished Dough	60 kg
Max Dry Flour	30 kg
Min Hydration	50%
Bowl Dimensions	567mm x 340mm

DIMENTIONS

External Width	650mm
External Depth	770mm

FRONT

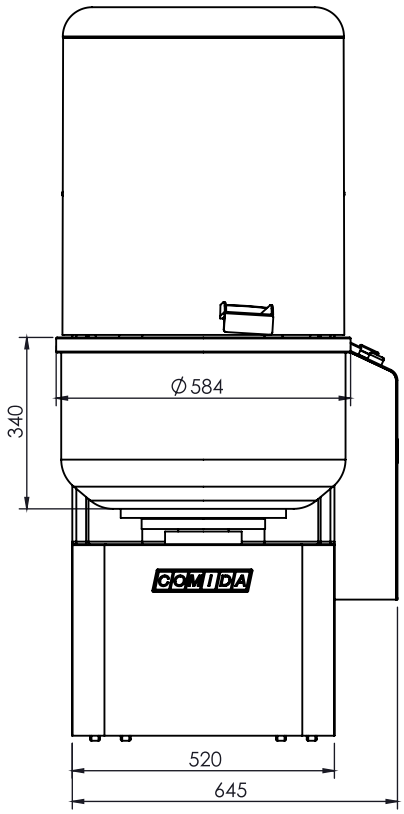

SIDE

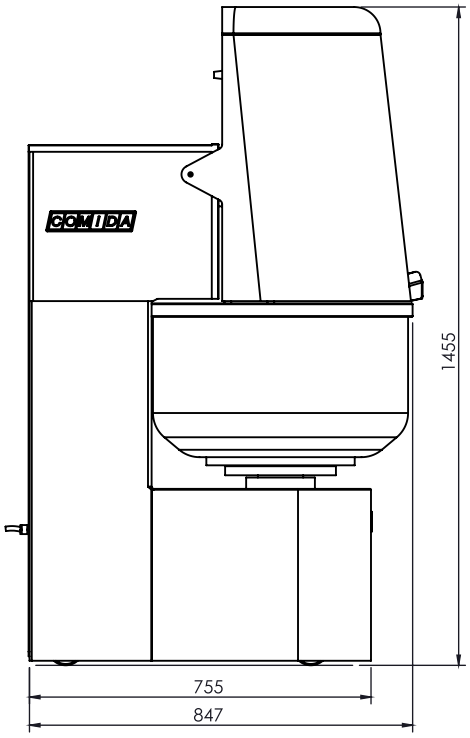

TOP

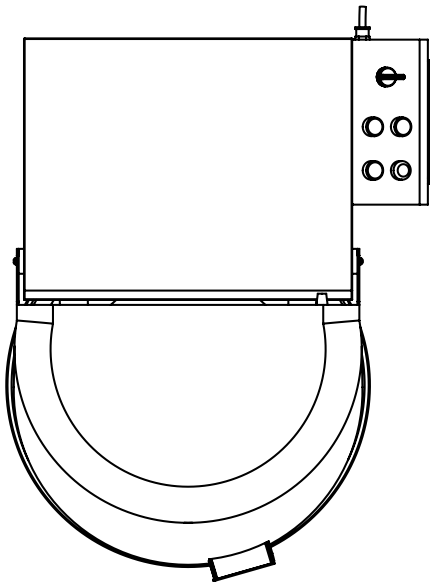

REAR

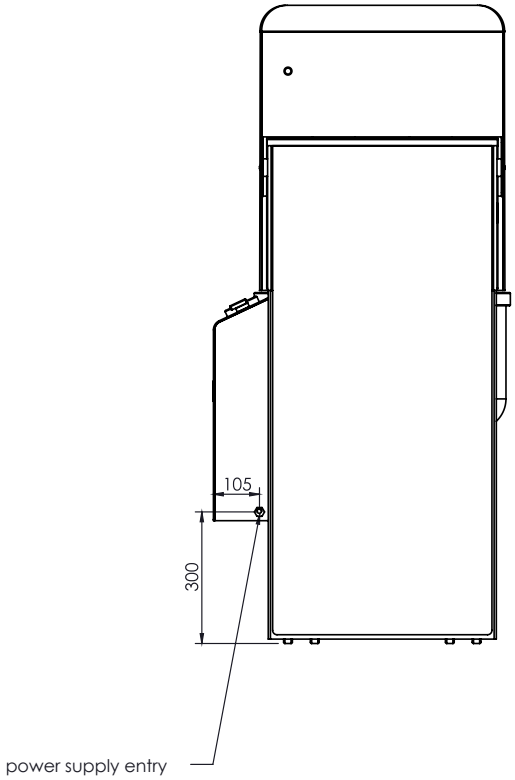

We reserve the right to alter specifications without notice.