# DEVIL 33 - PIZZA FORMING MACHINES

4FD3302

## Main Features

- Stainless steel construction
- Heated elements
- Non-stick cast iron plates with thick chrome plating to prevent sticking
- Top and bottom thermostats
- Timer to regulate compression time
- Plate size: 33 cm / 13 inch diameter
- Press up to 400 per hour




## SPECIFICATIONS

| | |
|---|---|
| Voltage | 400 volts, 3N 50Hz ,8.2 Amps |
| Power | 3600 Watts |
| Power Breakdown - | |
| Heating Element Power | 2 x 1500watts |
| Motor Power | 600 watts |
| Plug Supplied | No, lead only |
| Cable Length | 2m |
| Weight | 97 kg |
| Dough Weight | 100g - 270g |
| Upper/lower plate | 330mm |
| Noise level | <70 decibel |
| Ambient Temp | 0-40°C |
| Max humidity | 95% without condensation |
| Warranty | 4 Year Warranty (2 yr Labour 4 yr Parts) |

## DIMENTIONS

| | |
|---|---|
| External Width | 420mm |
| External Depth | 560mm |
| External Height | 775mm |

# DEVIL 33
4FD3302

## FRONT

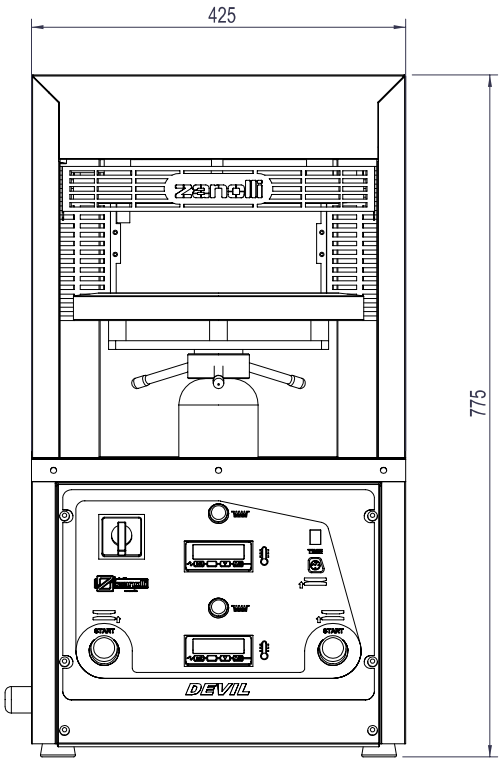


## SIDE

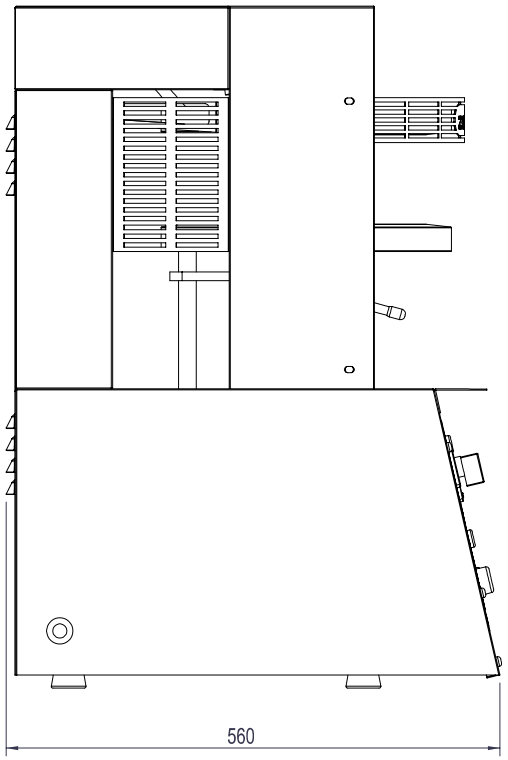


## TOP

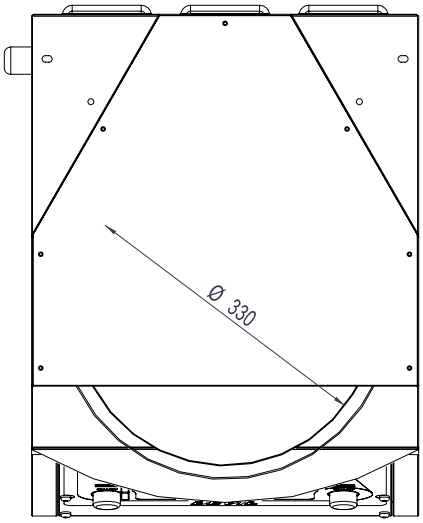


We reserve the right to alter specifications without notice.