TAE62SL

BAKERY COMBI / PASTRY DECK COMBINATIONS

Main Features

HOOD

Exhaust Hood with Optional 400 or 600 mc3 Suction capacity.

BAKING CHAMBER

- 6 Trays Capacity (600 x 400)
- Large 80mm Tray Spacing
- Self cleaning
- Weekly Auto Start Up
- 147 Baking Programs
- 2 speed fan regulation
- Bi-directional reversing fan system
- Halogen light
- Convection Cooking
- Combination Cooking
- Steam Cooking
- Probe Cooking
- Touch Panel User Control
- Automatic Preheat
- 6 Cooking Cycles for each Program
- Digital Steam Exhaust Regulation
- Water injection regulation

DECK OVENS

- 2 x Teorema Polis Pastry Deck Ovens accommodating 2 x (600 x 400) Trays Each
- Stone / or steel base options
- Optional steam Boiler

STAND

- Heavy Duty Stand With Lockable Castors

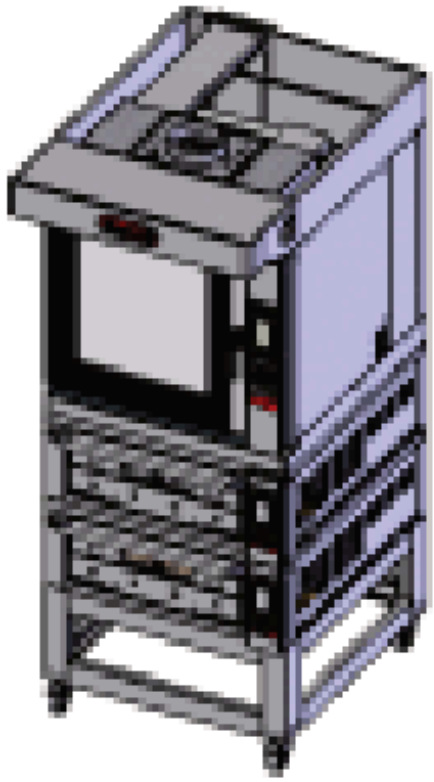

SPECIFICATIONS

Voltage	400V 3 Phase
Power	23.3 kw
Weight	455 kg
Plug Supplied	No
Capacity	6 Trays (400 x 600) for Anemos Bakery Combi 4 Trays (400 x 600) for Teorema Polis Pastry Deck Ovens
Thermostat	260°C Teorema Anemos bakery Combi 400°C Teorema Polis Bakery Deck
Warranty	4 Year Warranty (2 yr Labour 4 yr Parts)

COMPONENTS

1 x Ventilation Hood Top	1COM019A
1 x 6 Tray TEOREMA Anemos GE/MC TOUCH Bakery Combi Oven	5FC0403
1 x Stacking kit	1COM006A
2 x TPOLIS 2S 2 tray Bakery Deck Oven	2PO2H05B
1 x Heavy Duty Low Stand on Castors	1COM011A

DIMENTIONS

External Width	970mm
External Depth	1351mm (including hood)

TAE62SL

EXHAUST HOOD STRUCTURE AND PROVISION

FRONT

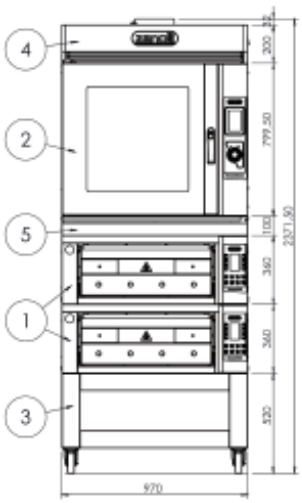



Num. articolo / Item num.	Quantità / Quantity	Descrizione / Description	Potenza / Power	Teglie / Trays	Passo teglie / Distance between trays
1	2	T POLIS 25	12.8 kW	n°4	
2	1	T ÄNEMOS 6E TOUCH	10.5 kW	n°6	80mm
3	1	STAND WITH CASTORS			
4	1	EXHAUST CANOPY	0.3 kW		
5	1	KIT COMBI			

Optional	Power
STEAM BOILER FOR DECK OVEN	2.8KW

SIDE

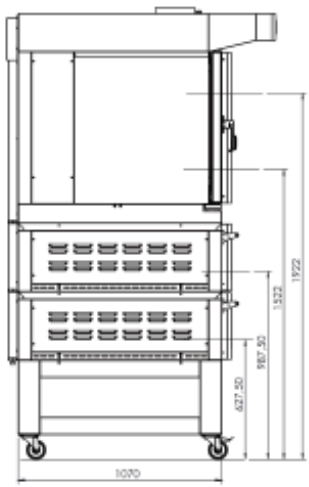

REAR

TOP

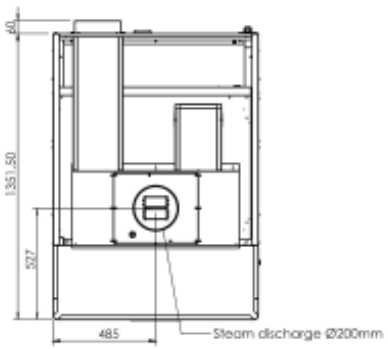

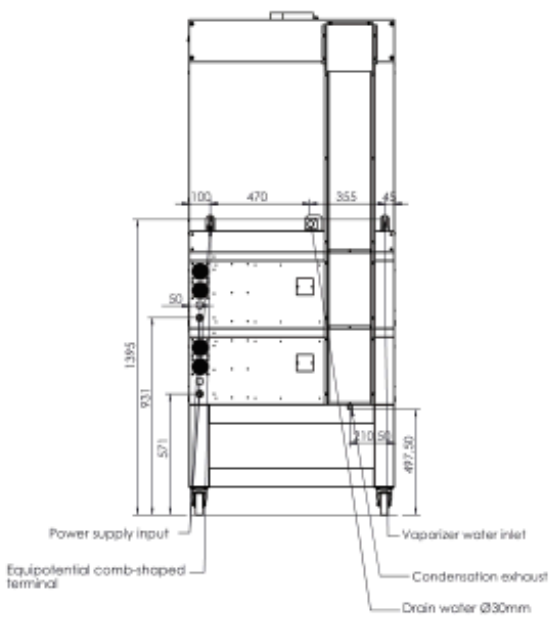

We reserve the right to alter specifications without notice.

TAE62SL

EXHAUST HOOD STRUCTURE, PROVISION & MOTOR (400M3/600M3 CAPACITY)

FRONT

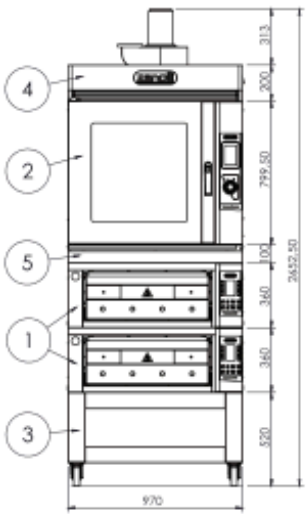



Num. articolo / Item num.	Quantità / Quantity	Descrizione / Description	Potenza / Power	Teglie / Trays	Passo Teglie / Distance between trays
1	2	T POLIS 2S	12.8 kW	n°4	
2	1	T.ÀNEMOS 6E TOUCH	10.5 kW	n°6	80mm
3	1	STAND WITH CASTORS			
4	1	EXHAUST WITH MOTOR	0.25 kW		
5	1	KIT COMBI			

Optional	Power
STEAM BOILER FOR DECK OVEN	2.8KW

SIDE

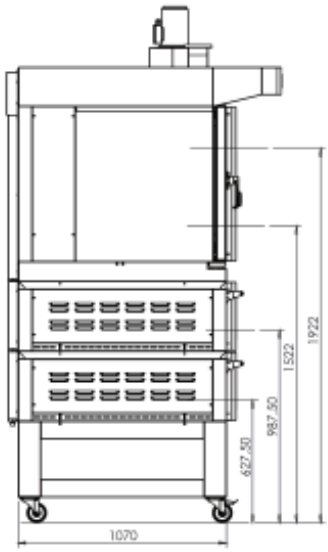

REAR

TOP

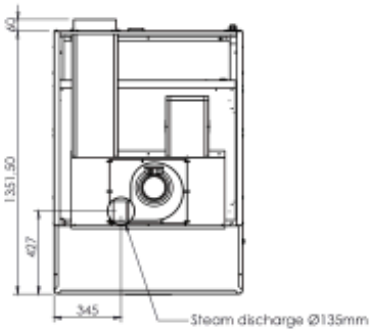

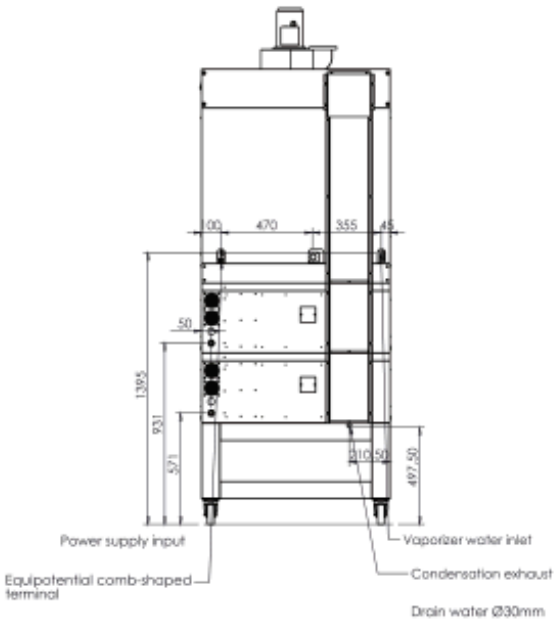

We reserve the right to alter specifications without notice.

TAE62SL
NO EXHAUST PROVISION

FRONT

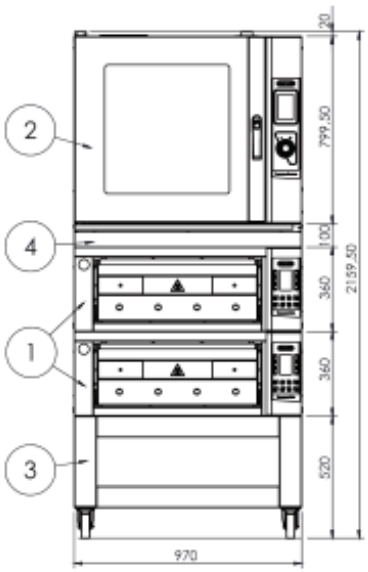



SIDE

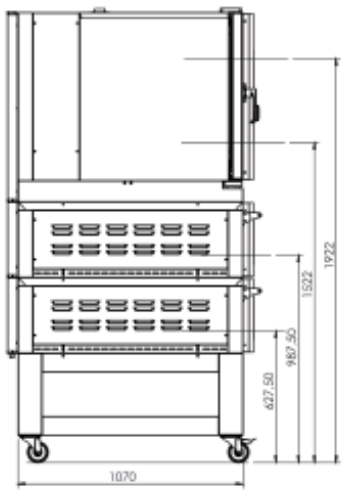

Num. articolo / Item num.	Quantità / Quantity	Descrizione / Description	Potenza / Power	Teglie / Trays	Passo teglie / Distance between trays
1	2	T POLIS 2S	12.8 kW	n°4	
2	1	T ÁNEMOS 6E TOUCH	10.5 kW	n°6	80mm
3	1	STAND WITH CASTORS			
4	1	KIT COMBI			

Optional	Power
STEAM BOILER FOR DECK OVEN	2.8KW

REAR

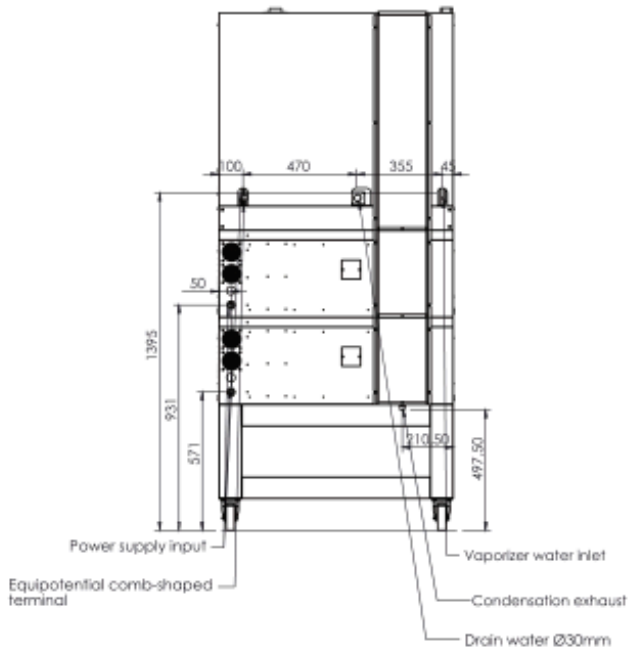

TOP

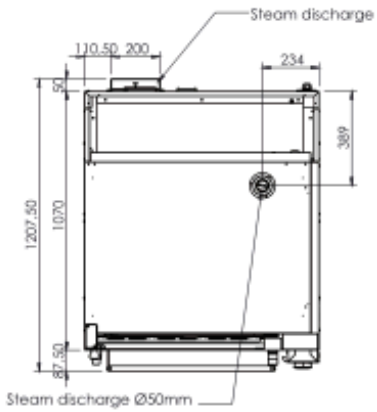

We reserve the right to alter specifications without notice.