ZANOLLI CITIZEN EP70 4

Electric Single Deck Pizza Oven – 4 Pizza Capacity

2EP6E11C-1

MAIN FEATURES

- Heavy-duty full stainless steel construction for superior durability
- Athermic full-length stainless steel handle designed for heat resistance, ensuring safe and comfortable handling
- Dependable electromechanical control panel with user-friendly dials
- Independent lighting within the chamber
- Armored stainless steel heating elements designed to minimize heat loss caused by frequent door openings and high-volume service.
- Each chamber features independent controls for the top and bottom heating elements, allowing for precise adjustment of both separately
- Stackable up to three units high, the Zanolli Citizen EP70 offers flexibility with different combinations of single or double deck units
- Maximum insulation of the oven chambers ensures an excellent balance between energy consumption and production efficiency
- Thick refractory ceramic oven floor designed for optimal heat retention and performance.
- Heavy-duty spring-mounted doors feature a large viewing window made of double fireproof glass
- Gasket-free, heavy-gauge insulated door designed to enhance heat retention within the cooking chamber
- Maximum temperature 400°C
- Compact design making it ideal for space-constrained environments
- Reliable and durable, thanks to the high quality of materials and components used in its construction
- Optional inbuilt exhaust hood canopy, compliant with and certified to all Australian and NZ standards



SPECIFICATIONS

Capacity	4 x Ø34cm
Configuration	Single Deck
Power Source	Electric
Voltage	415V or 240V upon request
Watts	5600W
Plug Supplied	No
Temperature	400°C
Baking Chamber	700 W X 700 D X 120 H
Dimensions	990 W X 990 D X 350 H
Weight	90 kg
Warranty	2 years parts and Labour

OPTIONS

Stand on castors
Exhaust Canopy

ZANOLLI CITIZEN EP70 4

Electric Single Deck Pizza Oven – 4 Pizza Capacity

2EP6E11C-1

FRONT

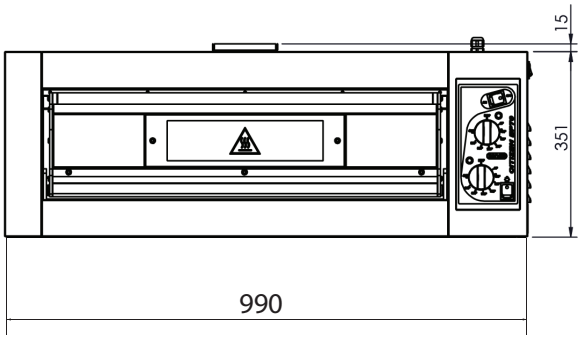

TOP

