# AVGVSTO 9 ELECTRIC DOME OVEN

2CT3E24B

## Main Features

- Fits 9 x 33cm pizzas
- Patented AIR TRAP SYSTEM delivers upto 30% energy saving
- Cooking chamber entirely lined with refractory ceramic
- Rockwool thermal insulation for high temperatures
- Reaches maximum temp. of 500°C in 90 minutes
- Independent adjustment of the temperature of the oven top and bottom with dual probe
- Independent adjustment of the power of the oven top and bottom (scale 0-100%)
- LED interior lighting
- Thermal insulation for high temperatures
- 45 cm antiqued black granite support surface
- Painted base, mounted on wheels or feet
- Can be dismantled in 5 macro-piecesfor ease of installation
- Concealable electromechanical control panel
- Customisable dome colours
- 15cm diameter fitting prepared for an easy connection to the central suction system



AIR TRAP SYSTEM® is a patented technology that creates an air barrier right before the mouth of the oven and keeps the heat inside the cooking chamber.

**Advantages of Air Trap System**
Energy saving -20% lower power consumption for a daily production cycle of 8 hours

-Up to 30% lower power consumption for a daily production cycle of more than 8 hours
-Superbly even baking, guaranteed even close to the mouth of the oven

working ergonomics at the top, eliminating the excessive heat that surrounds the pizza maker

## SPECIFICATIONS

| | |
|---|---|
| Voltage | Current at 400Vac 3N 50/60Hz - 28 Amps |
| Max Power | 19200 Watts |
| Avg Power | 9600 Watts |
| Plug Supplied | No, lead only |
| Weight | 550 kg |
| Refractory Floor thickness | 3cm |
| Capacity | 9 x 34cm pizzas |
| Exhaust Pipe | 150mm |
| Thermostat | 500°C |
| Ambient Temp | 0-40°C |
| Max Humidity | 95% without condensation |
| Warrenty | 4 Year Warranty (2 yr Labour 4 yr Parts) |

## ACCESORIES

Base closed on 3 sides
Retractible Rack for Peels with Tools
Dome colour customizable upon order:
RED, BLUE, GOLD*
Unpainted white dome, customizable by the client

## DIMENTIONS

| | | | |
|---|---|---|---|
| External Width | 1910mm | Internal Width | 1040mm |
| External Depth | 2120mm | Internal Depth | 1060mm |
| External Height | 2185mm | Internal Height | 125mm |

# AUGUSTO 9 ELECTRIC DOME OVEN

2CT3E24B

## FRONT

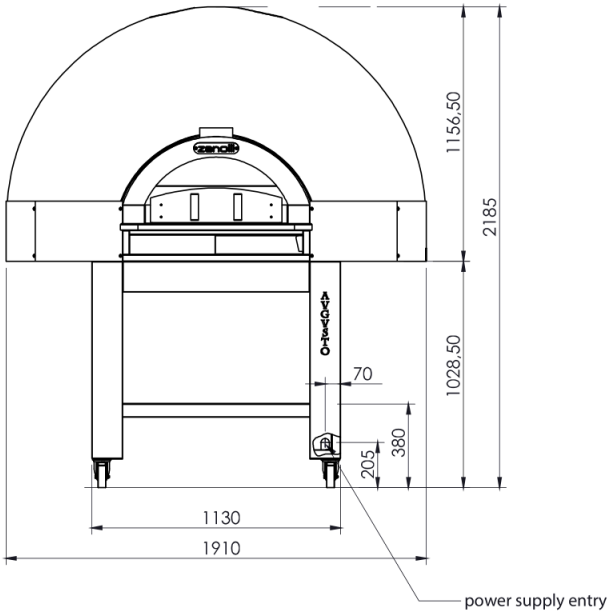


## SIDE

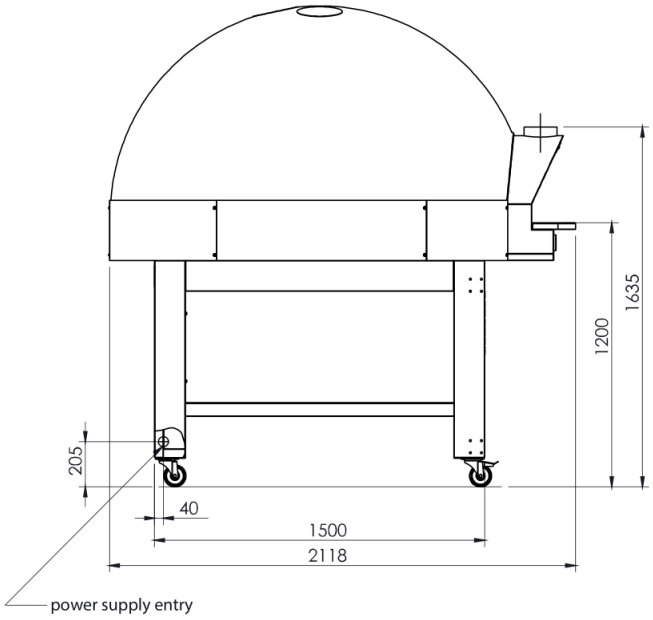


## TOP

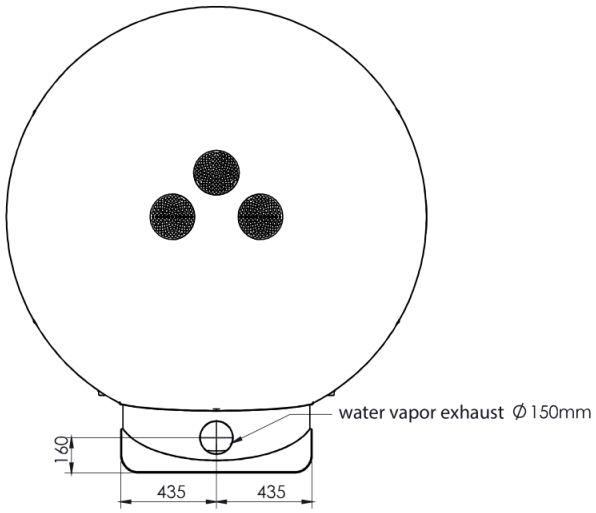


We reserve the right to alter specifications without notice.

# AUGUSTO 9 ELECTRIC DOME OVEN

2CT3E24B

## FRONT

## SIDE

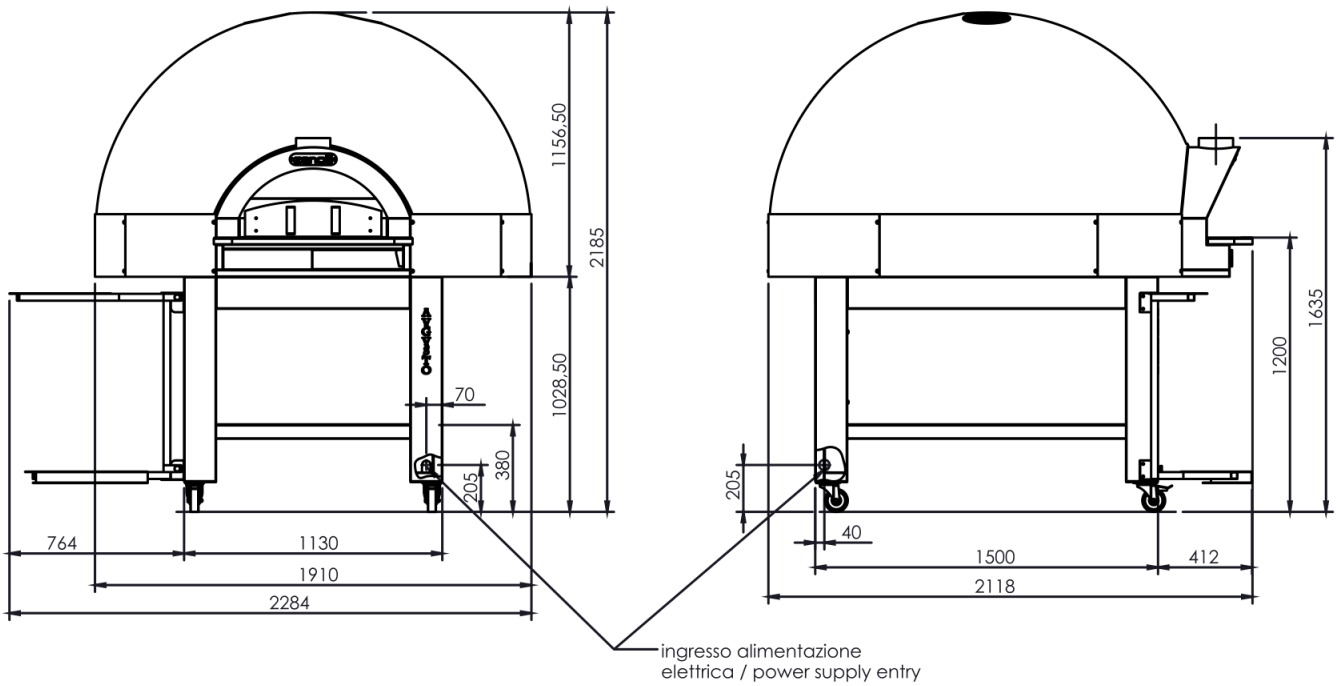


## TOP

| MOD. | Potenza kW/ Power kW |
|---|---|
| AUGUSTO 9E | 19.2 |

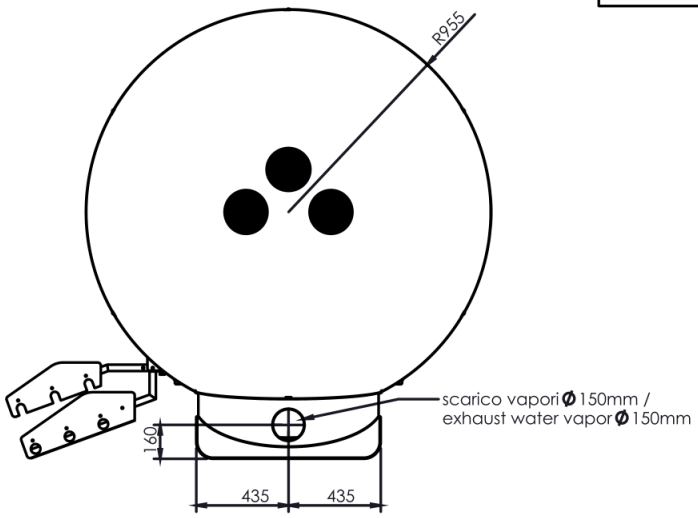


We reserve the right to alter specifications without notice.