# DATA SHEET

## Zanolli Synthesis 11/65G-1

## 26 Inch Gas Impingment Conveyor Oven

1SV4404C-1 ☐ LPG ☐ NAT



### Build

- Built entirely in stainless steel
- Double glazed full width inspection door
- Easy access for thorough cleaning and hygiene
- In built cooling system for all external parts ensures oven is cool to touch and work with.
- Heavy duty construction with reliable and durable components.
- Stackable up to 3 units.
- Optional Heavy duty stand with omnidirectional wheels and brakes

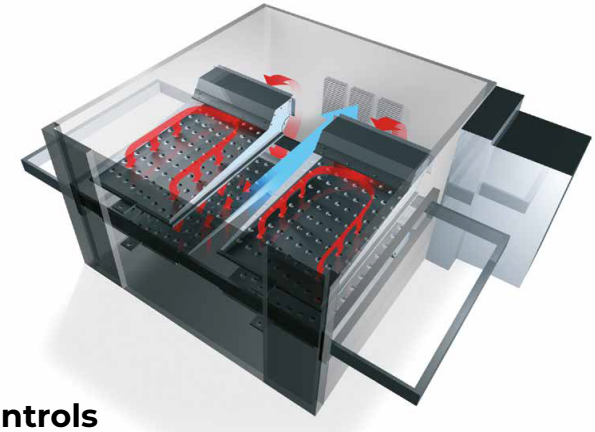

### Impingment technology

- Maximum silence of the mesh conveyor system and ventilation motors.
- Latest advancements in air impingement technology allow for rapid heating & cooking of all foods consistently at all times.
- The piercing jets of hot turbulent air encompass every part of the oven delivering exceptional results every time.

### Controls

**Temperature:**

- BRP (power regulation) system reaches working temperature in 20 minutes
- Balanced temperature detection system managed via dual oven probes..
- Maximum cooking temperature up to 320 °C

**Advanced control board automatically manages:**

- Energy consumption via electronic min/max flame controls contributing to significant savings.
- the cooking intensity ensuring highest performance at the lowest temperatures.

**Customizable and Programmable up to:**

- 10 programmes with unique temperatures and times.
- 2 auto start ups per day with your selected program

**Economy function allows:**

- The Economy function enables the oven to maintain a lower temperature when not in active use compared to when it's in operation. This feature conserves energy, leading to cost savings. Additionally, it controls the movement of the wire mesh conveyor, serving a dual purpose beyond just temperature management.

**Conveyor:**

- Adjustable speed conveyor belt all the way to a complete halt. The dashes on the display move top to

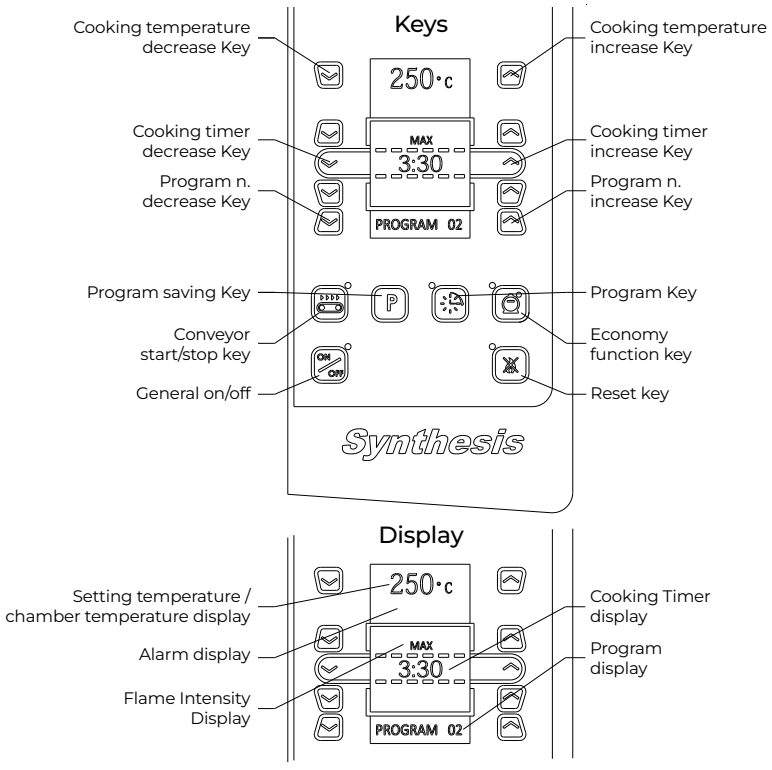

# DATA SHEET

## Zanolli Synthesis 11/65G-1

## 26 Inch Gas Impingment Conveyor Oven

1SV4404C-1 ☐ LPG ☐ NAT

## Technical specifications

**External Size**

| | |
|---|---|
| External Width | 1995mm |
| External Depth | 1540mm |
| External Height | 550mm |

**Cooking Chamber size**

| | |
|---|---|
| Internal Width | 1100mm |
| Internal Depth | 650mm |
| Internal Height | 100mm |

**Conveyor Belt Size**

| | |
|---|---|
| Conveyor Width | 1920mm |
| Conveyor Depth | 650mm |

**Weight**

| | |
|---|---|
| Net weight | 252 kg |
| package weight | * |

**Exhaust**

| | |
|---|---|
| Air exchange | 48 m3/h |
| Flame control | Electronic without pilot |

**Recommended Clearances**

| | | | |
|---|---|---|---|
| Minimum clearance | Left | Rear | Right |
| Standard | 200mm | 200mm | 200mm |

**Operating Environment**

| | |
|---|---|
| **Temperature** | 0 - 40 °c |
| **Maximum humidity** | 95% without condensation |
| **Noise** | < 70 decibels |

**Operation**

| | |
|---|---|
| **Conveyor Belt speed** | 2:20- 30 min / Halt |
| **Maximum Temperature** | 320°c |

**Warranty**

| | |
|---|---|
| **2 Year Warranty** | 2 years parts and labour |

**Subject to a prevanttitive maintence plan*

## Gas & Electircal Specification Per Oven

**Connection requirements electric**

| | |
|---|---|
| Electrical connected loads | 450 Watts |
| Voltage | 240V |
| Plug Supplied | Yes, 10 amps |
| Cable Length | 2m |

**Connection required gas**

| | |
|---|---|
| Gas Pipe | 1/2 " Male threaded tail |

**Injector Diameter**

| | |
|---|---|
| NAT Gas | 5 x 2.15mm |
| Universal LPG | 5 x 1.2mm |

**Low flame gas pressure**

| | | |
|---|---|---|
| NAT Gas | 3.2 mbar | 0.32 kpa |
| Universal LPG | 9 mbar | 0.9 kpa |

**High flame gas pressure**

| | | |
|---|---|---|
| NAT Gas | 10 mbar | 1 kpa |
| Universal LPG | 27.5 mba | 2.75kpa |

**Thermal capacity**

| | |
|---|---|
| High flame | 86.4 Mj/hr |
| Low flame | 48.6 Mj/hr |

**Consumption high flame**

| | |
|---|---|
| NAT Gas | 2.540 m3/h |
| Universal LPG | 1.893 Kg/h |

**Consumption low flame**

| | |
|---|---|
| NAT Gas | 1,430 m3/h |
| Universal LPG | 1.056 Kg/h |

# DATA SHEET

## Zanolli Synthesis 11/65G-1

## 26 Inch Gas Impingment Conveyor Oven

1SV4404C-1 ☐ LPG ☐ NAT

### Options

☐

| Micromesh belt - 6mm | |
|---|---|
| SKU | -- |

☐

| Right to left Belt configuration | |
|---|---|
| SKU | -- |

☐

| High speed conveyor belt gearbox | |
|---|---|
| SKU | -- |

☐

| Stand suited for Single/Double deck configuration | |
|---|---|
| SKU | 0SV2A06 |
| Size | 1320 x 1100 x 560 |
| Weight | 40kg |

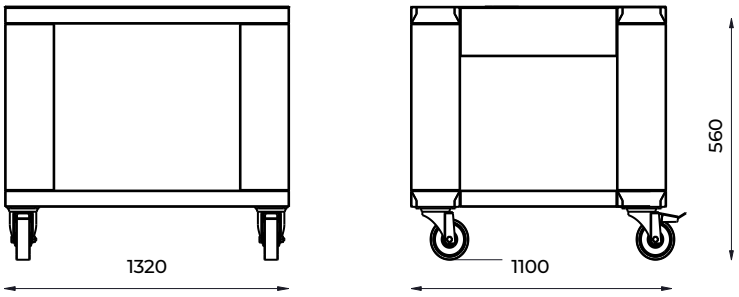

# DATA SHEET

## Zanolli Synthesis 11/65G-1

## 26 Inch Gas Impingment Conveyor Oven

1SV4404C-1 ☐ LPG ☐ NAT

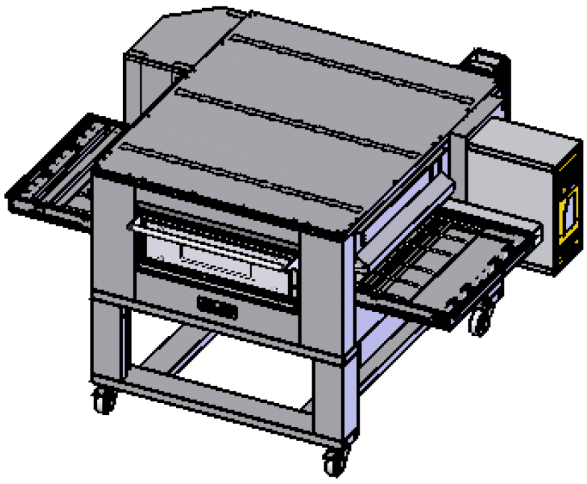

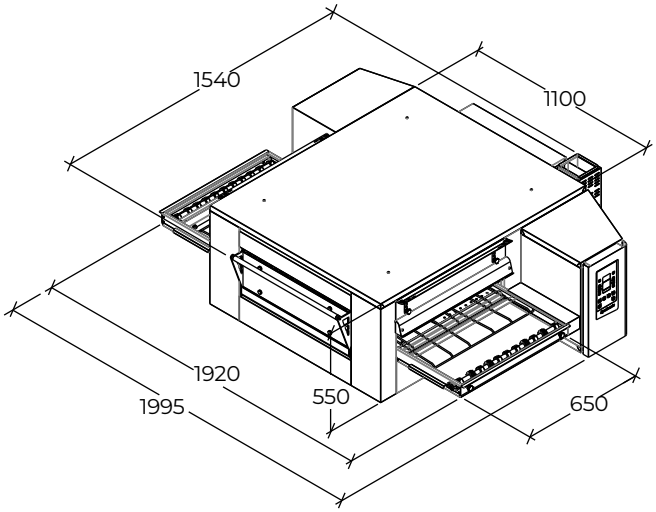


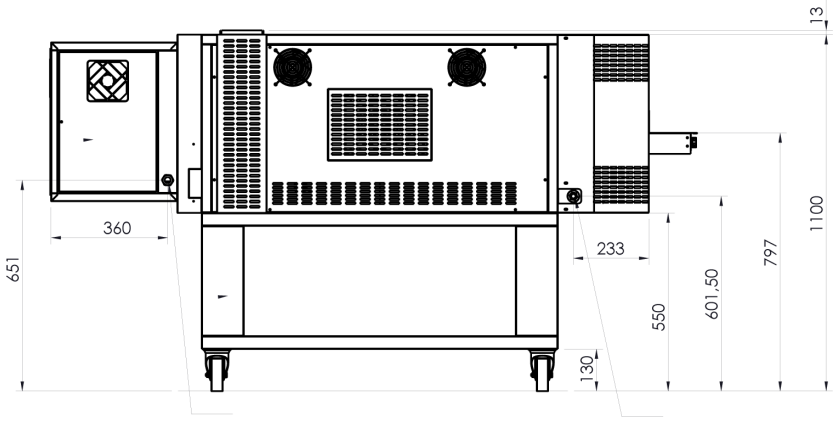


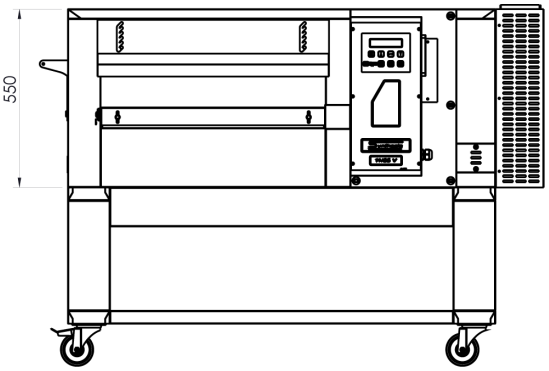


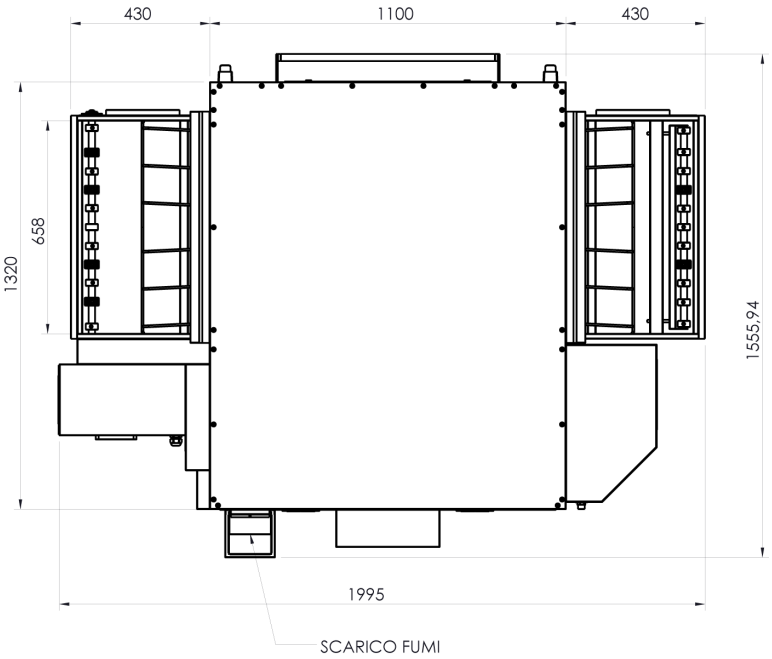


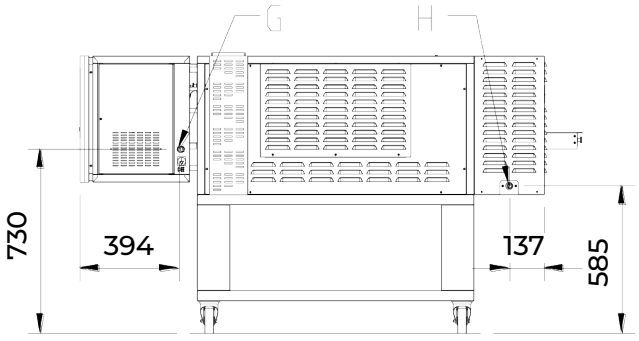


| | |
|---|---|
| G | Entry point for power supply |
| H | Entry point for gas |