SELENE 60
PLANETARY MIXERS

COMIDA

Main Features

- The control panel is positioned at the front of the machine and is provided with controls designed for ease of use
- The shafts rotate on ball bearings suitable for use under high-stress conditions
- The bowl protection guard complies with safety regulations. When lifte up, it activates a microswitch that automativally stops the machine.
- The unit rests of four rubber vibration mounts that guarantee stability and the reduction of noise levels.

Standard accesories include :
- Thin Wire Whisk
- Flat Beater
- Kneading Hook



SPECIFICATIONS

Voltage	400Vac 3 50Hz
Power	2.2 kw
Speed	Speeds - 3 speeds - 1° 34 RPM (0.9kw) 2° 68 (1.8kw), 3° 136 (2.2kw)
Maximum Current	5.6A
Weight	210 kg
Plug Supplied	No
Bowl Lift	Manual
Bowl Capacity	60 liters
Bowl Diameter	460mm x 410mm
Humidity	Max 95%
Noise level	<70 decibel
Ambient Temp	Max 40°C

OPTIONAL CONTROL -
Variable Speed Inverter - Single Phase Operation



STANDARD CONTROL -
3 speeds with 3 phase Motor.



DIMENTIONS

External Width	690mm
External Depth	1030mm

FRONT

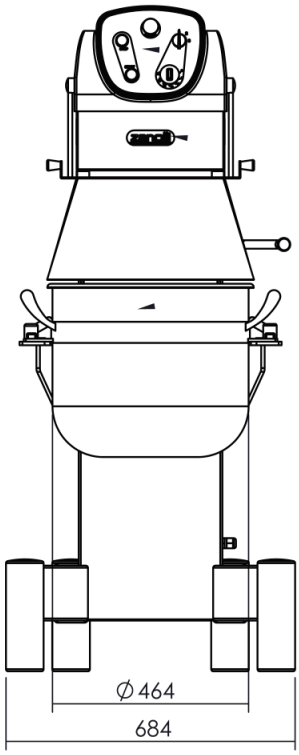

SIDE

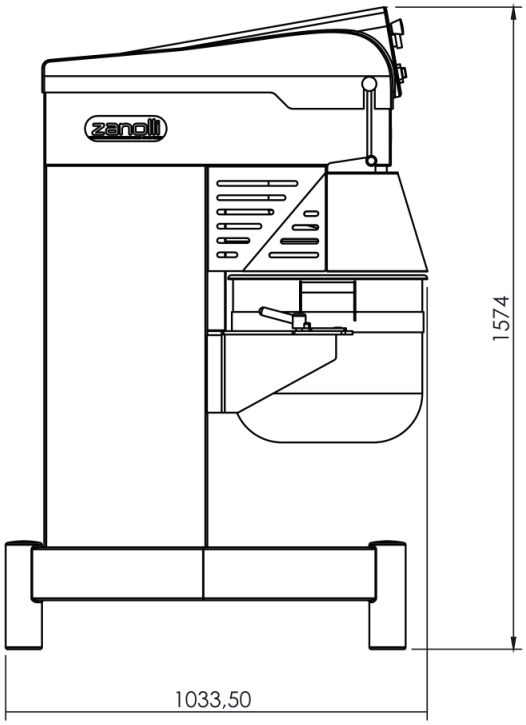

TOP

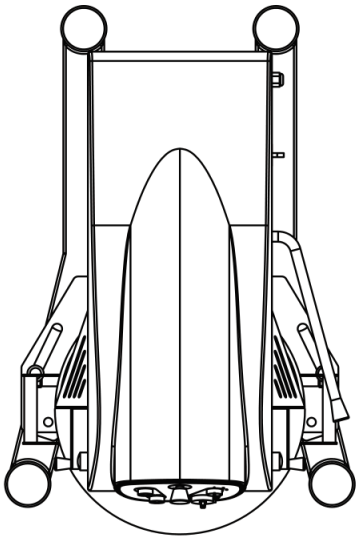

SIDE

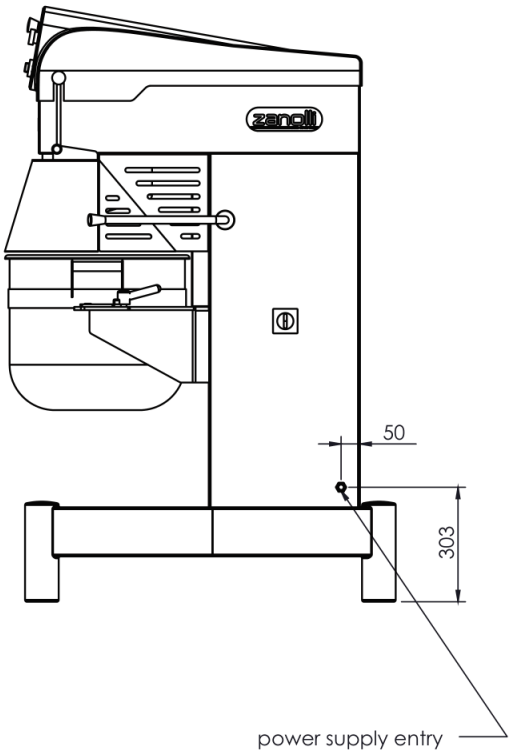

We reserve the right to alter specifications without notice.

SELENE 60
PLANETARY MIXERS

COMIDA

PRODUCTIVITY CHART - Selene Mixers

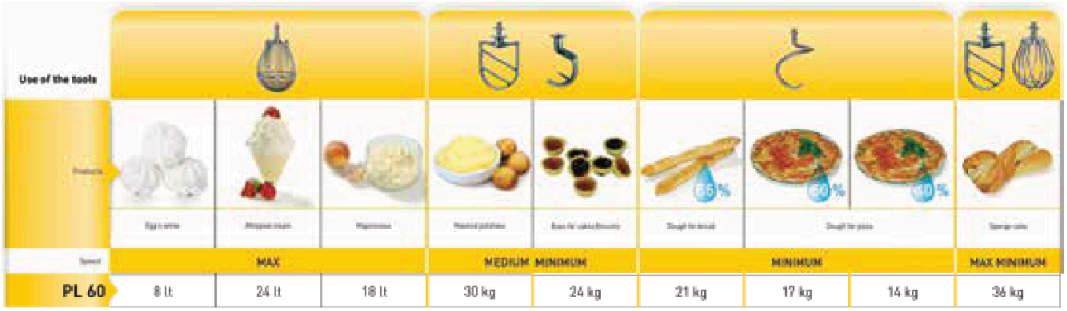

TOOL GUIDE - Selene Mixers

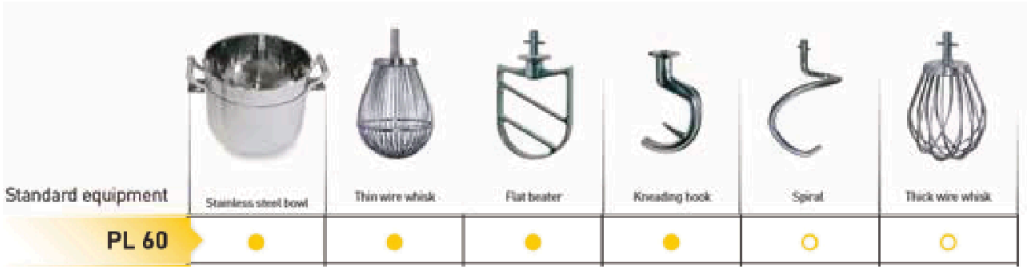

ACCESSORIES

- Stainless Steel Bowl
- Think Wire Wisk
- Flat Beater
- Kneading Hook
- Steel kneading Spiral
- Thick Wire Wisk
- Scraper
- Trolley for Bowl
- Automatic Lifting System
- Reduction Kit Bowl + Accessories Selene 60 to 20
- Reduction Kit Bowl + Accessories Selene 60 to 40