DATA SHEET

Anemos 6 EM pastry oven

5FC0402

Build

- 6 tray convection pastry oven capacity (600 x 400) trays
- Oven chamber with double tempered glass door. The outer glass can be accessed for thorough cleaning
- Large 80mm tray spacing for high bakery products
- 2 speed fan regulation with bi-directional reversing fan system
- Well lit chamber with halogens
- Electronic water injection regulation dial (10 levels of intensity)
- Digital thermostat for temperature regulation
- Mechanical timer 0-120'



Uniformity

- The cooking chamber is powered by a robust bi-directional fans, generating a uniform heated airflow. These fans automatically reverse direction every 100 seconds, ensuring consistent heat distribution and even baking throughout the process.



Cleaning

- Easy to reach the outer and inner glass for thorough cleaning

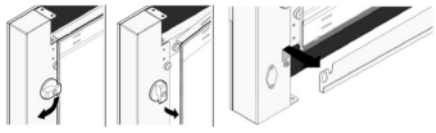

- Easily removable drip tray

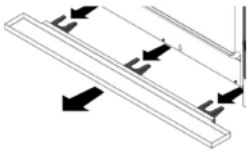

- Easily removable Baking pan holders

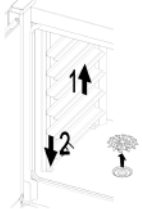

Control

- Constant display of temperature
- Electronic water injection steaming regulation (10 levels of intensity)
- Mechanical timer 0-120
- Digital thermostat for temperature regulation

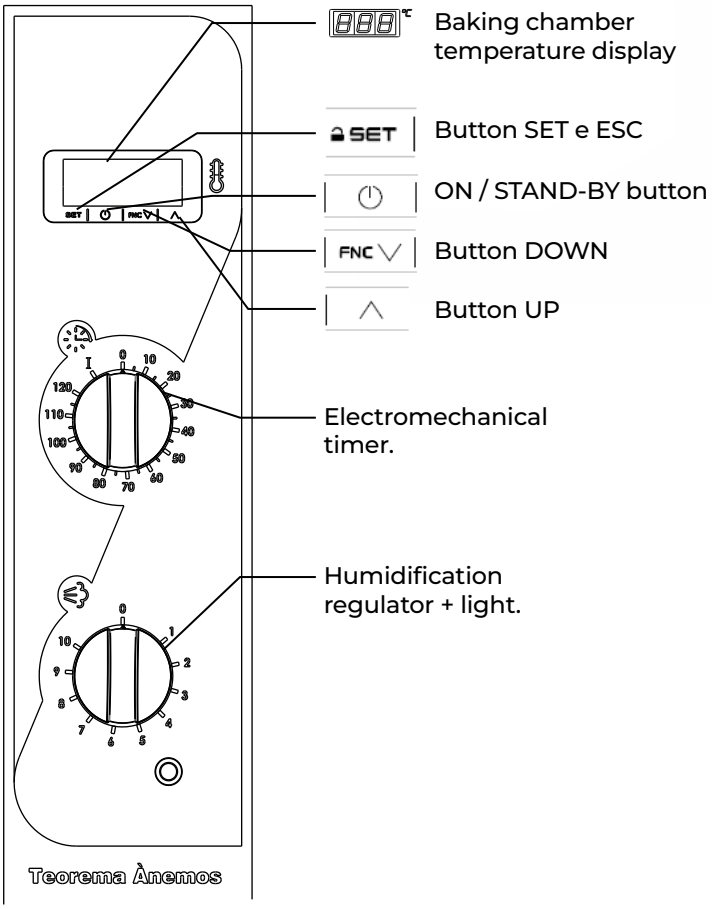

DATA SHEET

Anemos 6 EM pastry oven

5FC0402

Technical specifications

Dimensions and weight

External Size

External Width	970mm
External Depth	920mm
External Height	880mm

Internal chmaber size

External Width	660mm
External Depth	460mm
External Height	610mm

Oven capacity

Maximum tray capacity	6
Maximum tray size	600 x 400
Tray spacing	80mm
Maximum weight per oven batch	4kg

Weight

Net weight	110 kg
package weight	*

Operation

Maximum temperature	260 °C
Timer	120 '
Fan reversal Rotation	1.40'
Humidity levels **	0- 10

***We recommend the use of humidification at a chamber temperature not lower than 150 °C*

Room between walls

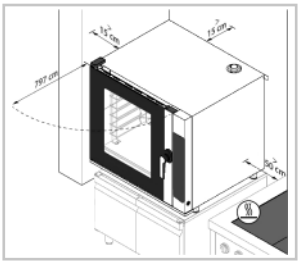

Left	150mm
Rear	150mm
Right	150mm

⚠ *Placement near other equipment that reaches high temperatures is not recommended. If necessary, ensure a gap of at least 50 cm at the sides and 70 cm at the rear or place an insulating wall in between.*

Connection requirements electric

Total electrical load	10.5kw

Electrical supply current (Standard)

Voltage	400
Current at 400Vac 3-N 50/60Hz	16.5A

Electrical supply current (Upon request)

Current at 230Vac 3 50/60Hz	28A

Cable and Lead

Plug Supplied	No
Plug Type	Lead only
Electrical connection	Cable with 4 or 5 conductors

Operating Environment

Ambient Temperature	0 - 40 °C
Maximum humidity	95% without condensation

Lighting

Halogen	40w

Connection requirements water

Water inlet characteristics

Maximum temperature	30°C
Maximum hardness	5°f (French degrees)

** Every 1°f equates to 10 mg/l of calcium carbonate*

Maximum Pressures	150 kPa (1.5bar) - 200 kPa (2 bar)
Chloramines	< 0.1 ppm (Ng/l)

⚠ *Pressure below 150 kPa (1.5 bar): the appliance may not function properly.*

⚠ *Pressure above 200 kPa (2 bar): install a pressure reducer calibrated at 200 kPa (2 bar).*

⚠ *Excessively hard water (> 5°F): use demineralisers; Excessive hardness of the water could cause limescale build-up inside the cooking chamber and damage the internal tubes, heating elements, fans and solenoid valves.*

Connection position

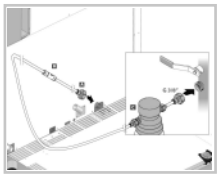

The appliance is equipped with:
1) ø 8 mm inlet with filter
2) 1.5 m tube with G3/4" connections

A:	**Water inlet ø 8 John Guest;**
B:	**Non-return valve;**
C:	**Water filter Cartridge (NOT SUPPLIED) ****

*** Installation of a water filter is mandatory*

NB - The water inlet in the electromechanical version is only used for cooking that requires humidification

Water outlet

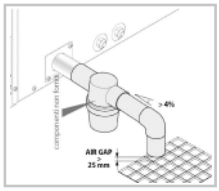

Connect the drain to a hose, NOT metallic, able to withstand high temperatures (over 90°C).

The drain must have the following characteristics:
1) be of the siphon type (SIPHON NOT SUPPLIED);
2) be a maximum of one meter long;
3) have a minimum slope of 4%;
4) not have bottlenecks;
5) have an "air gap" of at least 25 mm;
6) have a diameter not less than that of the drain connection.

NB - Air gap means the gap between the drain pipe and the evacuation area (grate or other receiving tube). Compliance with this regulation guarantees that potentially dangerous bacteria CANNOT come back up the drain pipe and contaminate dishes. Refer to diagram for correct positioning.

Exhaust

Vapour exhaust	140mm

Warranty

2 Year Warranty	2 years parts & labour

**Subject to a prevanttitive maintence plan*
**Refer to our warranty policy*

Best practices & Guidelines

- The oven temperature may drop by 20-30°C when loading it with food. This drop isn't a problem; it shows that the raw product is releasing heat due to water evaporation. To counter this, we suggest setting a higher temperature initially to ensure the desired temperature is reached once the food is inside the oven.
- The oven has a production capacity specified in kilograms of product per batch. If this maximum capacity is exceeded, the temperature in the cooking chamber can drop by 20-30°C. In such cases, it's necessary to remove the excess product and allow the temperature to stabilize before beginning the next baking session.
- Arrange the food evenly on the baking pans, avoiding overlapping or overloading. Distribute the baking pans evenly throughout the entire height of the cooking chamber, adhering to the maximum batch capacity and load indications specified for your appliance.
- For best results, open the door as little as possible during cooking.
- Avoid salting food inside the cooking chamber. If salting is necessary, clean the appliance promptly afterward.
- The convection oven is marketed and distributed as a pastry oven. Using this appliance for fatty foods with grills, such as roasts or poultry, may cause excessive degradation and wear that the oven wasn't designed for.

DATA SHEET

Anemos 6 EM pastry oven

5FC0402

Options

☐

10 Tray Prover with Humdifier	
SKU	ANC6E01A
Size	970 x 880 x 1060
Weight	85kg
Power (Heating)	1kW
Power (Humidifier)	1kW
Total electrical Load	2kw
Distance between Trays	55mm
Pan capacity	10

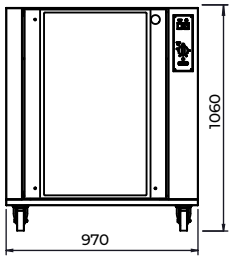

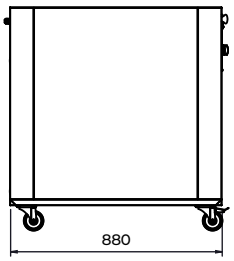

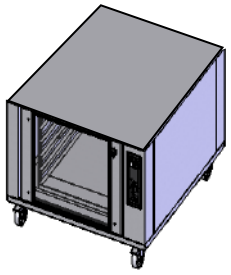

☐

Mobile Stand	
SKU	0CT5A12A
Size	970 x 710 x 1060
Weight	30kg

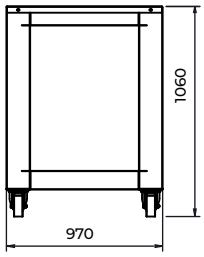

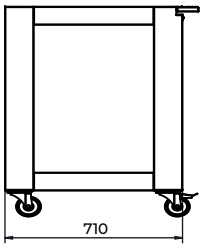

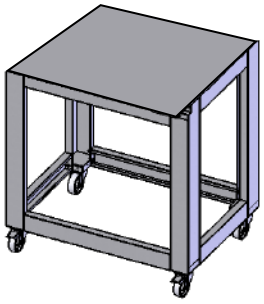

☐

Pan Holder	
SKU	CARR0080

***Can be mounted on above stand at any stage for 600 x 400 tray inserts*

☐

GN Conversion kit	
SKU	ACCE0272

***Convert 600 x 400 bakery tray setup into GN 1/1 configuration*

☐

Double Stacking kits	
SKU	TADSK

☐

Exhaust Hood	
SKU	0FC1M04
Size	970 x 1060 x 200
Weight	23.5kg

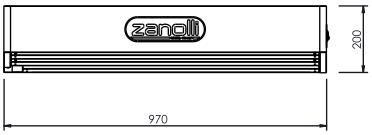



☐

Exhaust Motor Kit	
SKU	ASSM2623
Height	313mm
Power	.025kw
Suction Capacity	600 m3/h
Spigot	136 Ø

***Slimline version available with finished exhust height at 250mm*
***Requirements are motor kit is to be installed onto exhaust Hood*

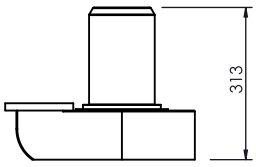

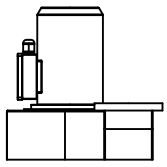

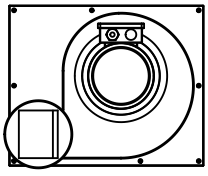

☐

Self-Condensating Hood	
SKU	SCHTA

***This option must be installed in conjuction with the Exhaust Hood and Exhaust motor kit.*

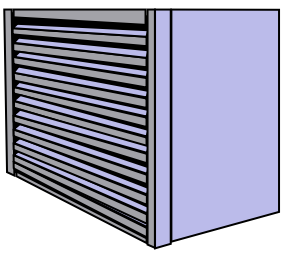

DATA SHEET

Anemos 6 EM pastry oven

5FC0402

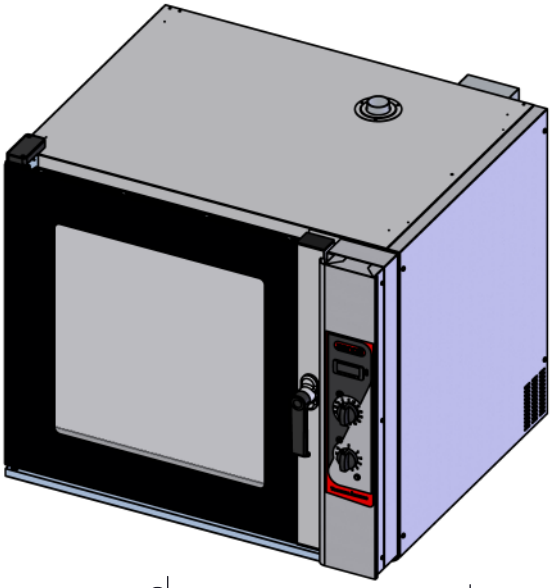

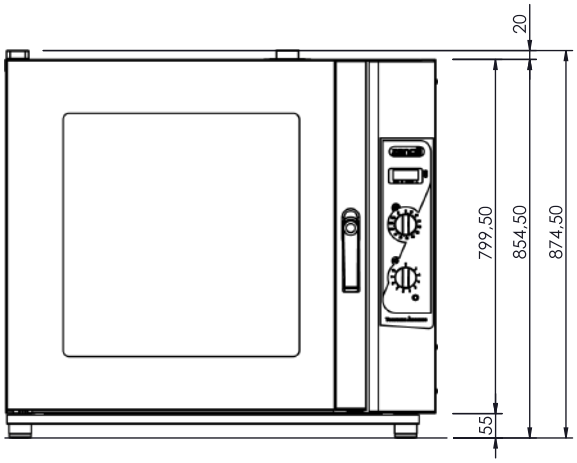

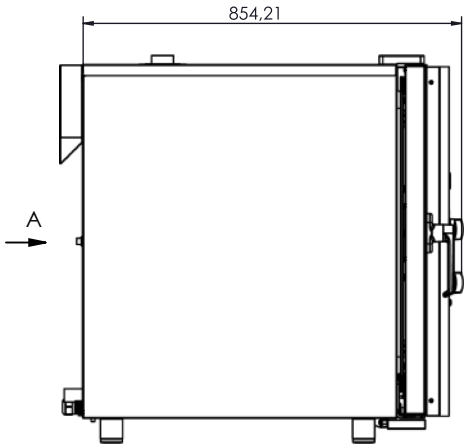

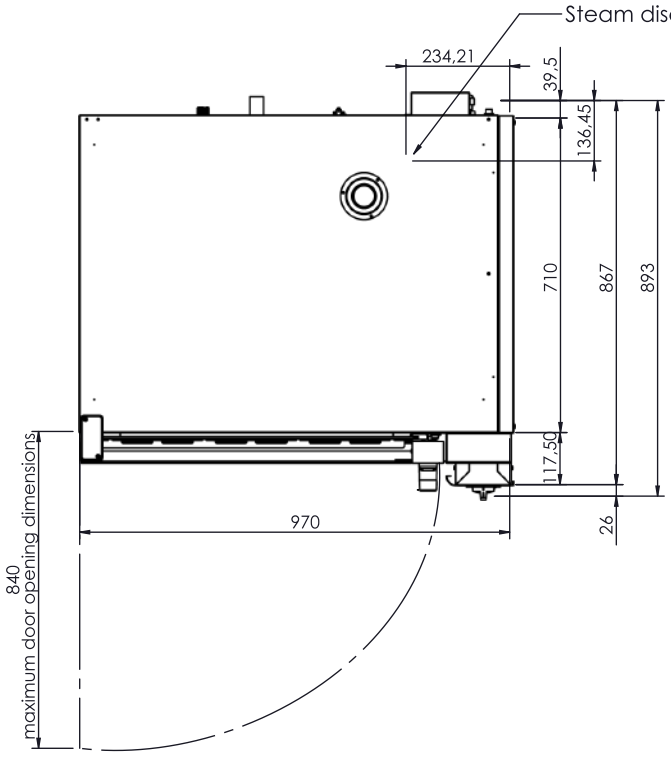

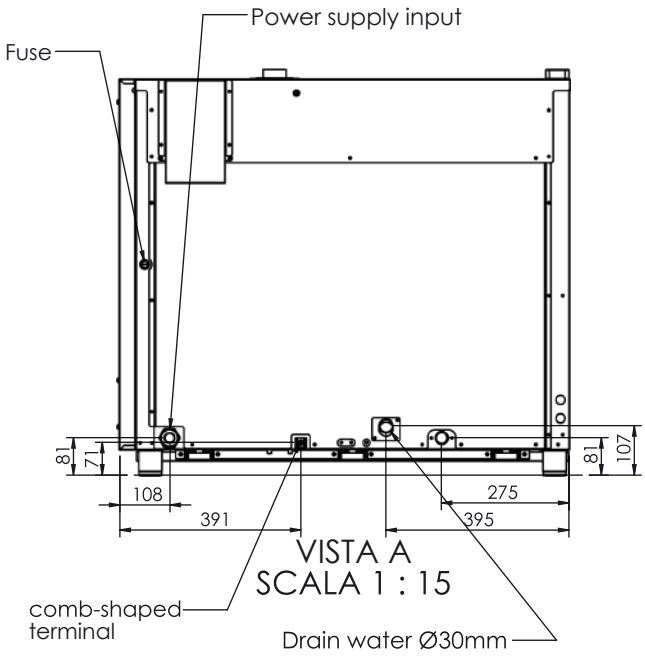

DATA SHEET

Anemos 6 EM pastry oven

5FC0402

Connections for electrical and water inlet

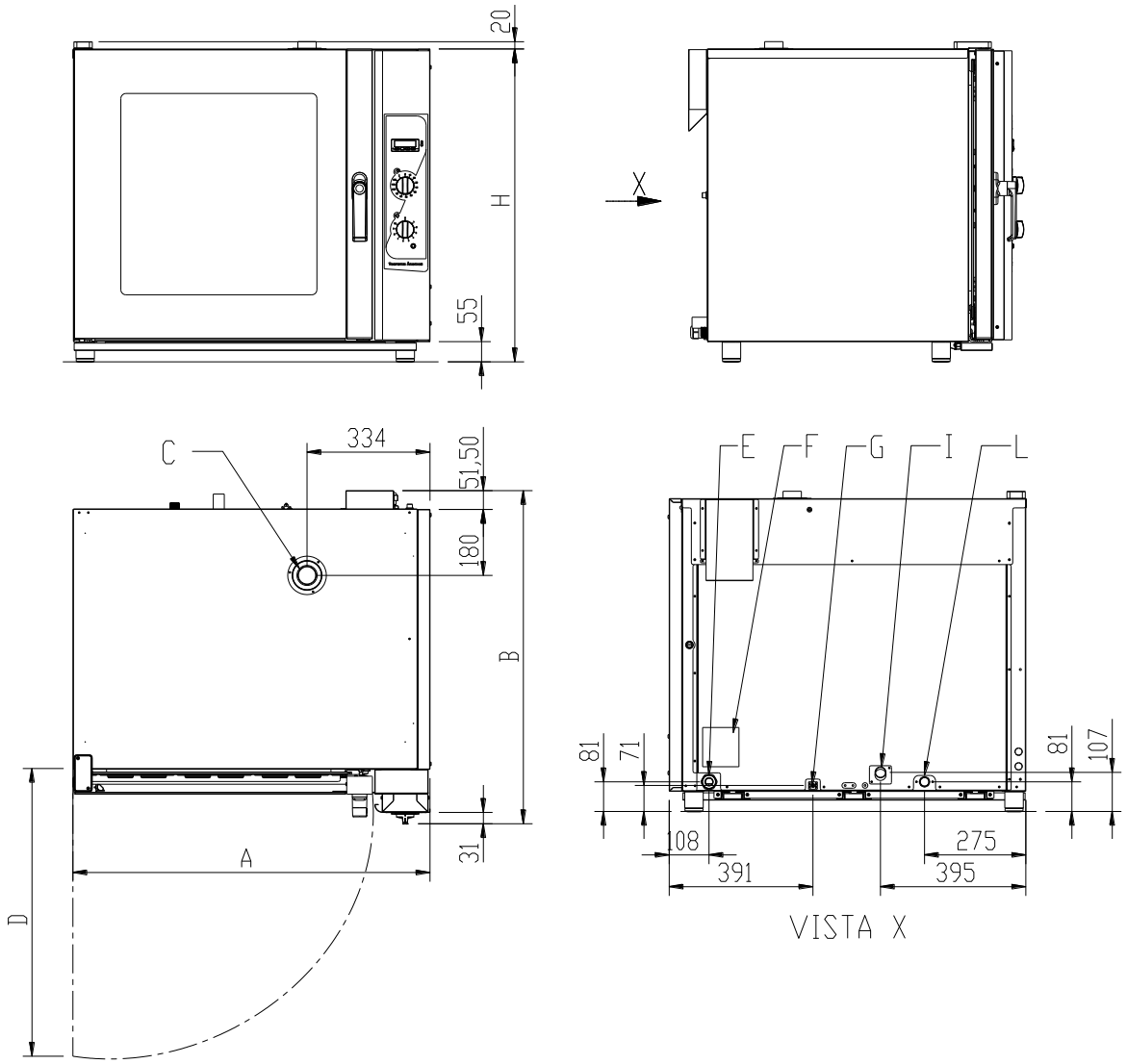

Optional with exhaust

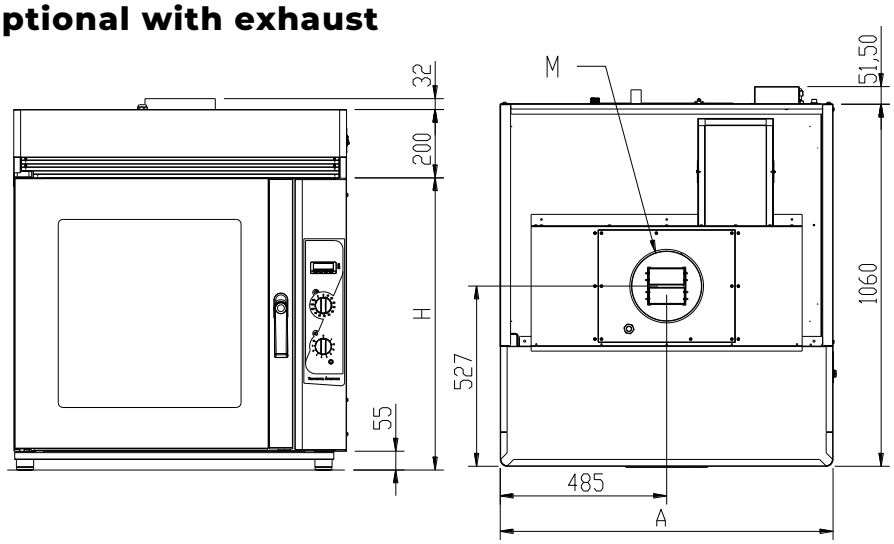

AxBxH	See technical specifications
C	Vapour exhaust Ø 50mm
D	Max door opening dimensions 840mm
E	Electrical power input
F	Information plate
G	Equipotential bonding connection
I	Condensationexhaust Ø 30mm
L	Water supply inlet
M	Washing detergent supply inlet
N	Vapour exhaust ø 200mm
O	Vapour exhaust ø 140mm