L120IV Automated Industrial Cutter Processor

YAZICILAR®



Main Features

- Cut, mix and homogenize
- Process every kind of organic material
- Variable speed setting allows flexibility
- Different types of blades; curved serrated blades, curved flat blades, straight flat blades are available
- Heavy duty machine intended for industrial use
- Full automatic operation
- Labor and time saving
- Fast and convenient.

DIMENSIONS

External Width	825
External Height	1190
External Depth	550

An in-built touch screen is present in this machine, making each operation effortless. The timer, the variable speed function, the reverse revolving function, the cover and tilting mechanism controls are all integrated into the touch panel.

SPECIFICATIONS

Voltage	400 volts, 50/60 Hz EN
Power	18500 Watts
Plug Supplied	No, lead only
Capacity	120 litres
Speed	600-3000 rpm
Capacity/Batch	75 kg (product)
Capacity/Hour	1200 kg (product)
Weight	340 kg
Warranty	2 Year Parts 1 year Labour

HORIZONTAL

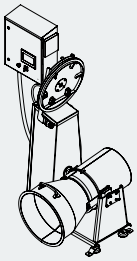

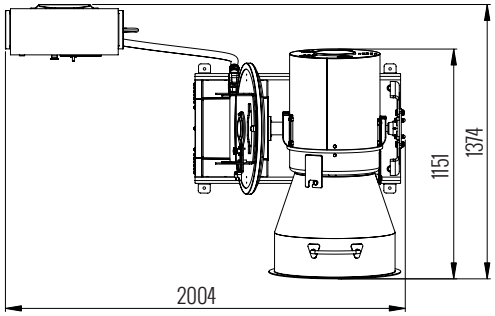

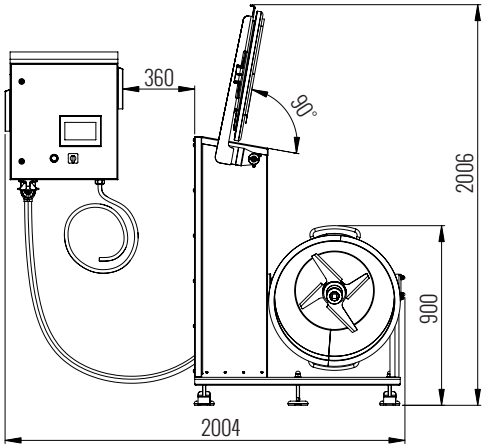

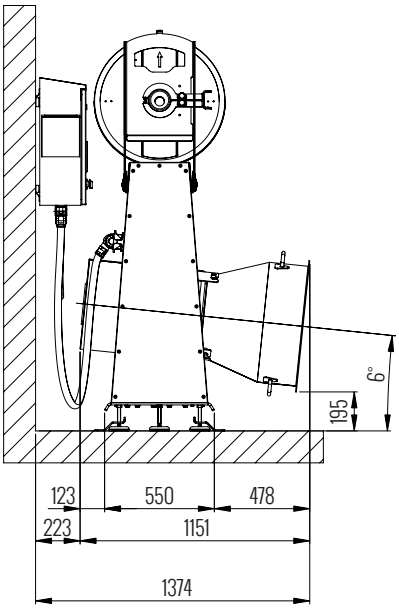

VERTICAL

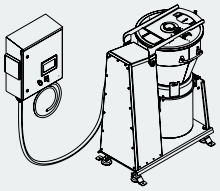

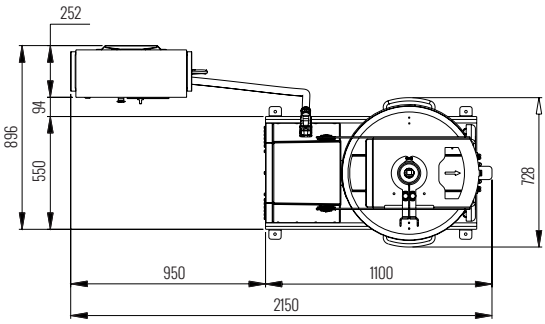

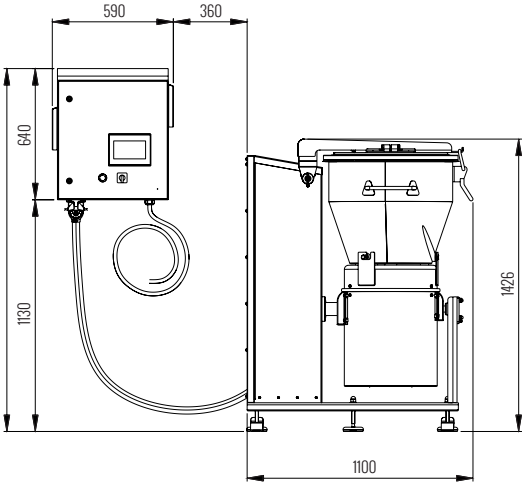

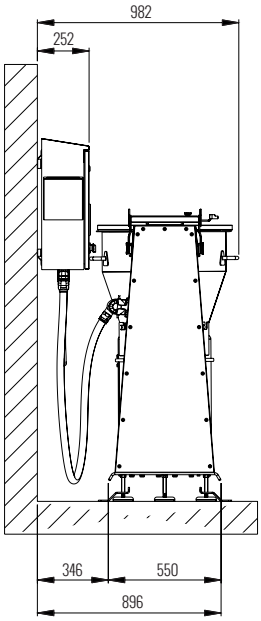

We reserve the right to alter specifications without notice.