L45IV Free Standing Cutter Processor

YAZICILAR®



The L45IV floor standing cutter is designed for clients who wish to achieve greater capacity with fewer machines. Robust construction and a heavy duty design promises longevity.

The four blade patented knive promises great performance in short time. The upper blades process the upper half of the bowl while the lower blades process the lower half. This way the product is evenly processed in the shortest possible time period while avoiding overheating and the spoiling of the end-product.

Main Features

- Patented 4 blade design
- Intended for processing high density materials
- Increased flexibility with variable speed
- Reverse speed function to mix products with cutting
- Electronic timer and tilt lock

DIMENSIONS

External Width	825
External Height	1190
External Depth	550

AVAILABLE ACCESSORIES

- Curved serrated knife
- Curved flat knife
- Straight serrated knife

SPECIFICATIONS

Voltage	380 volts, 50/60 Hz EN
Power	7500 Watts
Plug Supplied	No, lead only
Capacity	45 litres
Speed	600-3000 rpm
Capacity/Batch	15 kg (product)
Capacity/Hour	225 kg (product)
Weight	120 kg
Warranty	2 Years Parts 1 year Labour

HORIZONTAL

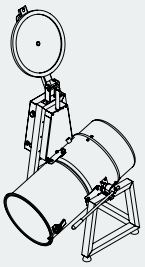

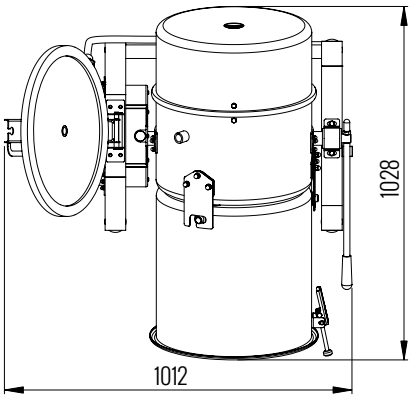

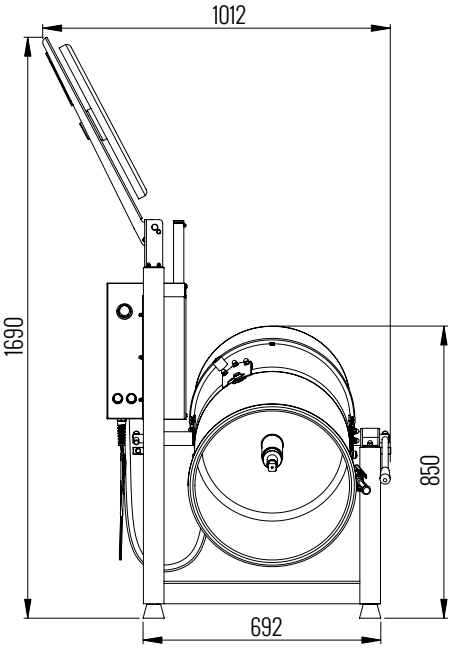

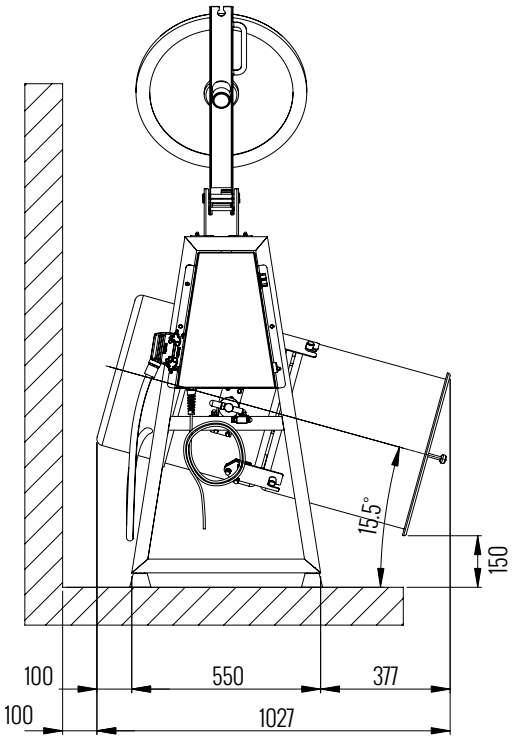

VERTICAL

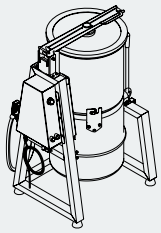

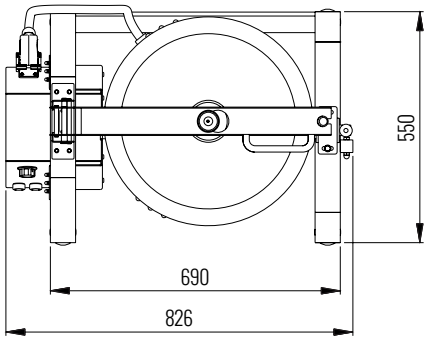

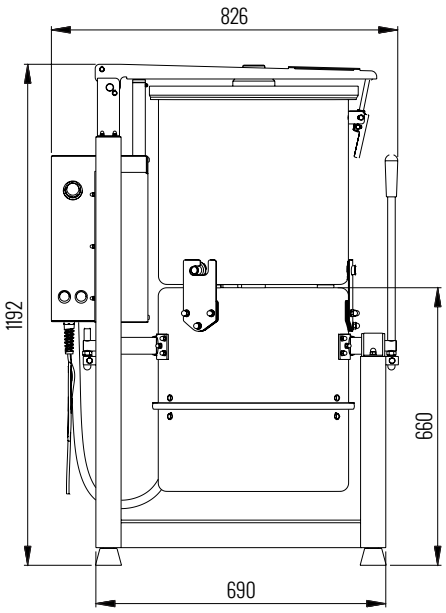

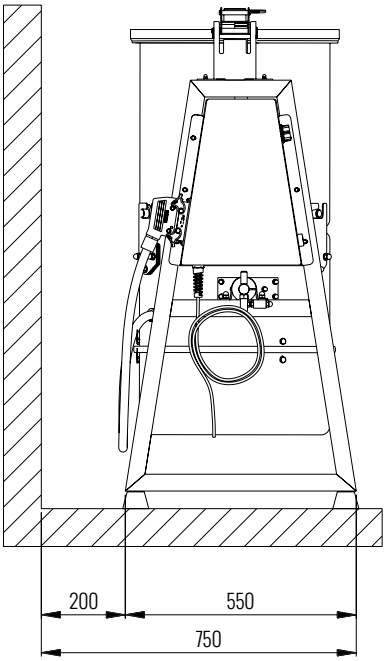

We reserve the right to alter specifications without notice.