L20IV Free Standing Cutter Processor

YAZICILAR®



The L20IV floor standing cutter is designed for clients who wish to achieve greater capacity with fewer machines. Robust construction and a heavy duty design promises longevity.

The four blade patented knive promises great performance in short time. The upper blades process the upper half of the bowl while the lower blades process the lower half. This way the product is evenly processed in the shortest possible time period while avoiding overheating and the spoiling of the end-product.

Main Features

- Patented 4 blade design
- Intended for processing high density materials
- Increased flexibility with variable speed
- Reverse speed function to mix products with cutting
- Electronic timer and tilt lock

DIMENSIONS

External Width	730
External Height	1045
External Depth	480

AVAILABLE ACCESSORIES

- Curved serrated knife
- Curved flat knife
- Straight serrated knife

SPECIFICATIONS

Voltage	220-240 volts
Power	2200 Watts
Plug Supplied	Yes, 10 amp plug
Capacity	20 litres
Speed	600-3000 rpm
Capacity/Batch	9 kg (product)
Capacity/Hour	180 kg (product)
Weight	48 kg
Warranty	2 Years Parts 1 year Labour

HORIZONTAL

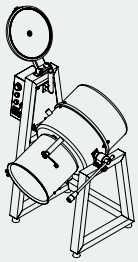

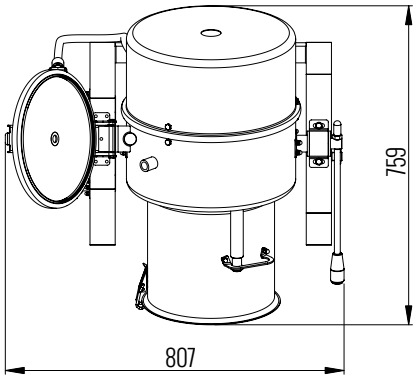

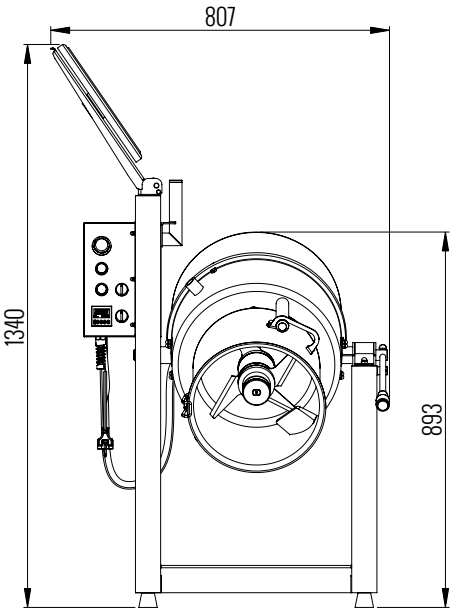

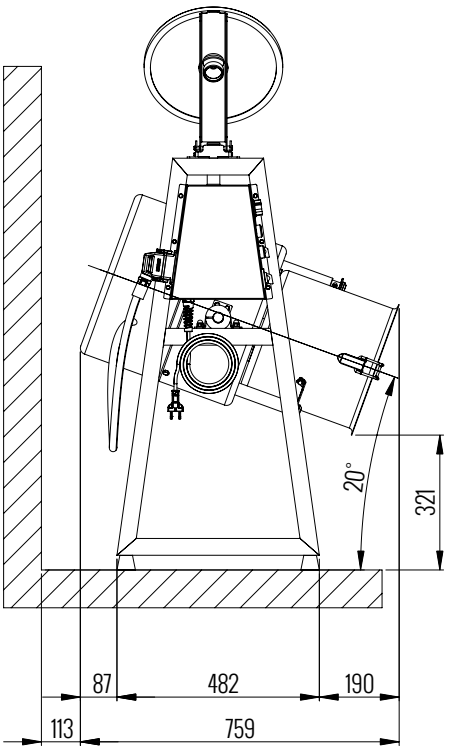

VERTICAL

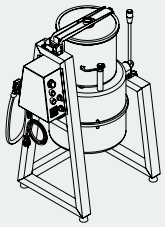

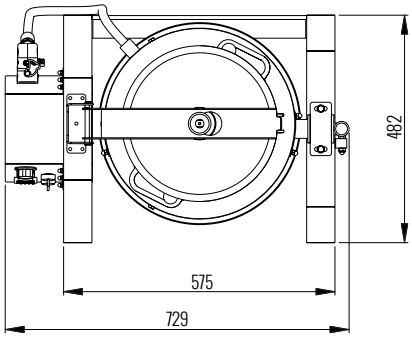

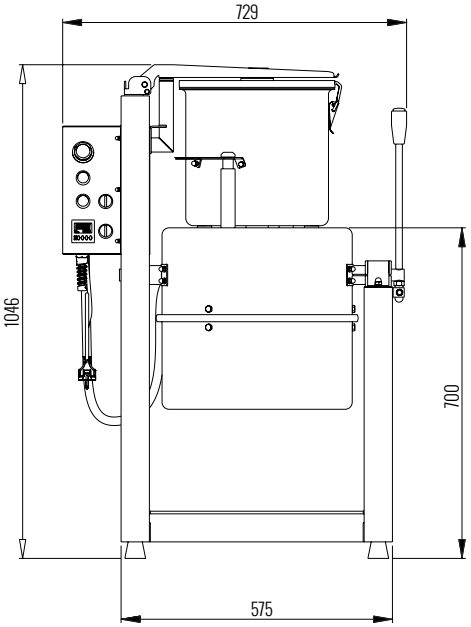

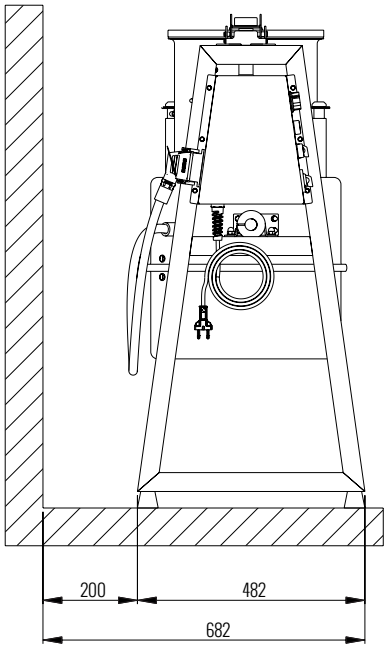

We reserve the right to alter specifications without notice.