G20 Standing Spice Grinder

YAZICILAR®



Main Features

- Professional grinder for busy work loads
- High capacity and non-stop operation
- Removable and cleanable parts
- Inverter drive protecting motor against misuses and enabling variable speed
- Speed dial to control the speed of the machine from 1200 to 8000 rpm

UP TO 8000 RPM

Conventional cutters can only reach 3000 rpm knife revolution speed. At that rate you cannot make powder sugar or process nuts without spoiling them.

DIMENSIONS

External Width	825
External Height	1190
External Depth	550

AVAILABLE ACCESSORIES

- Curved serrated knife
- Curved flat knife
- Straight serrated knife

SPECIFICATIONS

Voltage	380 volts, 50/60 Hz EN
Power	11000 Watts
Plug Supplied	No, lead only
Capacity	65 litres
Speed	600-3000 rpm
Capacity/Batch	22 kg (product)
Capacity/Hour	330 kg (product)
Weight	145 kg
Warranty	2 years Parts 1 year Labour

VERTICAL

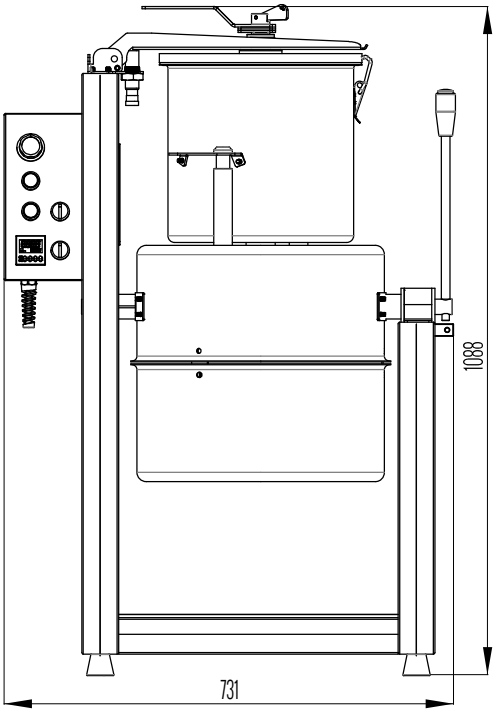

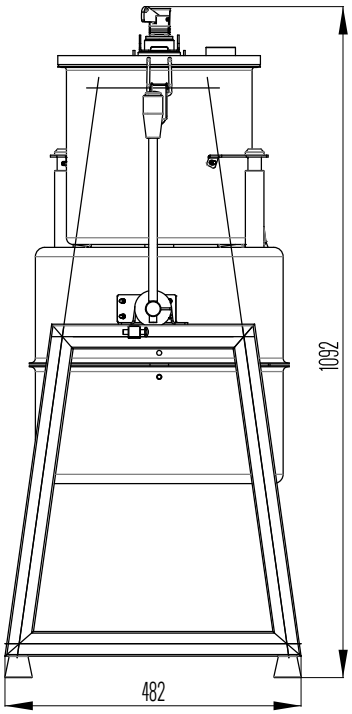

HORIZONTAL

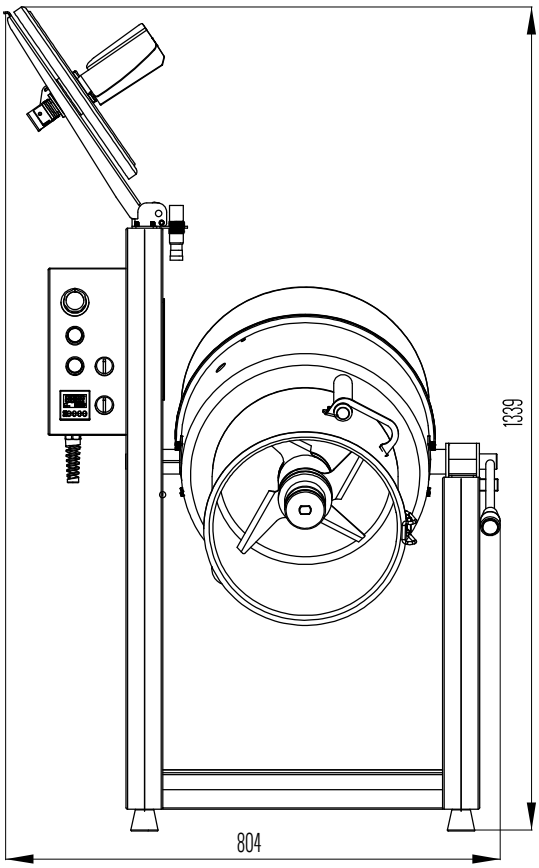

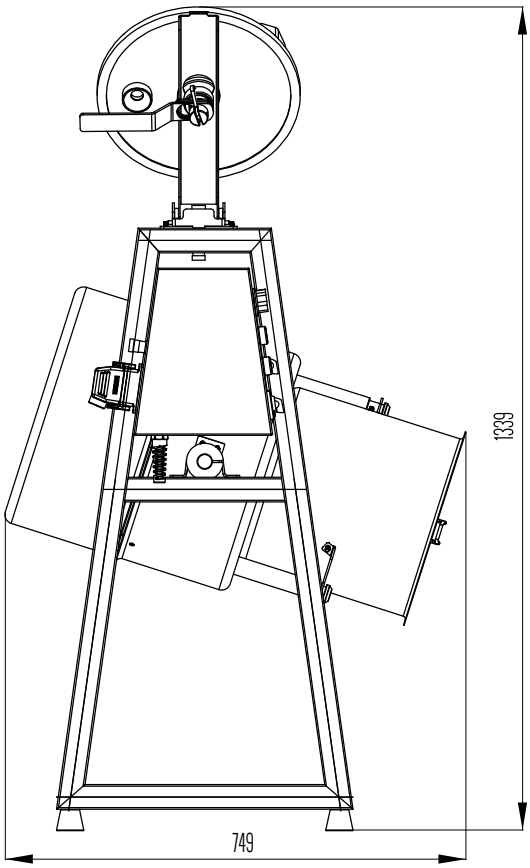

We reserve the right to alter specifications without notice.