Heliosa 9 Waterproof Heater

9S22 - On/off control



SPECIFICATIONS

Power	2200 Watts
Heated area	20-25 m²
Net weight	2.45 kg
Gross weight	3.50 kg
Plug Supplied	10 amp, 5 metre cable
Warranty	2 Year Parts 1 year Labour (Asset must be registered to activate full warranty)

DIMENSIONS

External Width	465
External Height	195
External Depth	113

Main Features

- Heats up to 20-25 square metres
- IPX5 waterproof
- Silver colour
- Oven painted with epoxy powder
- Reflective aluminum reflector
- Power cable length 5 metres
- Suitable for both inside and outside areas

FRONT

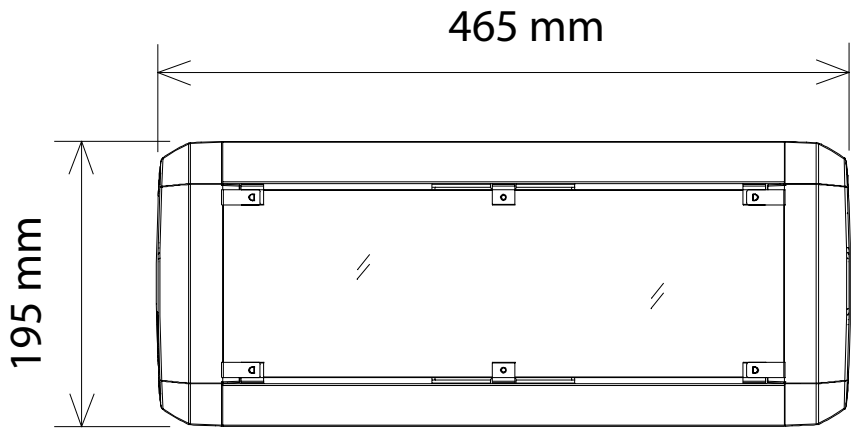

SIDE

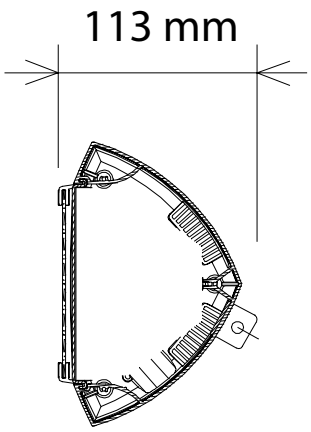

TOP

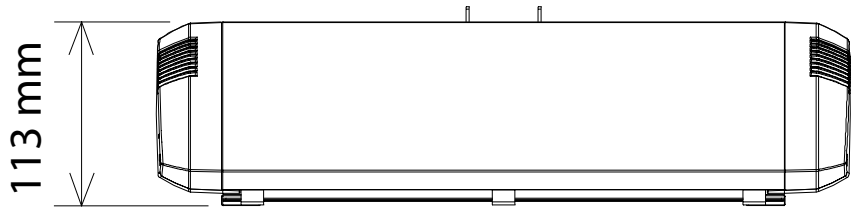

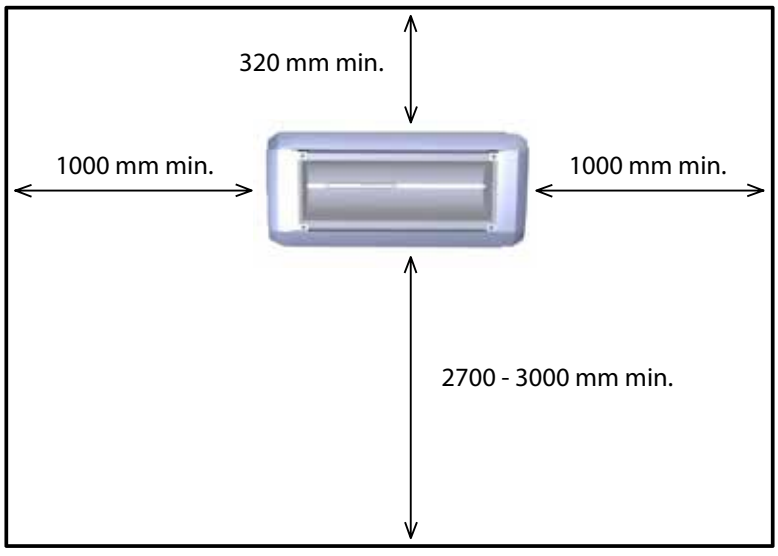

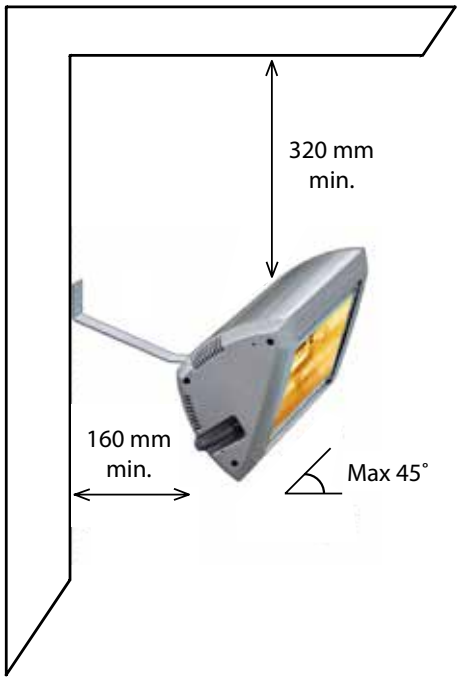

WALL INSTALLATION

Heliosa must be placed perfectly horizontal and outside distances as above.

We reserve the right to alter specifications without notice.