Heliosa 99 Waterproof Heater

99S40 - On/off control



SPECIFICATIONS

Power	4000 Watts
Heated area	40-45 m²
Net weight	4.05 kg
Gross weight	5.55 kg
Warranty	2 years Parts 1 year Labour (Asset must be registered to activate full warranty)

DIMENSIONS

External Width	910
External Height	195
External Depth	113

Main Features

- Heats up to 40-45 square metres
- IPX5 waterproof
- Silver colour
- Oven painted with epoxy powder
- Reflective aluminum reflector
- Power cable length 5 metres
- Suitable for both inside and outside areas

FRONT

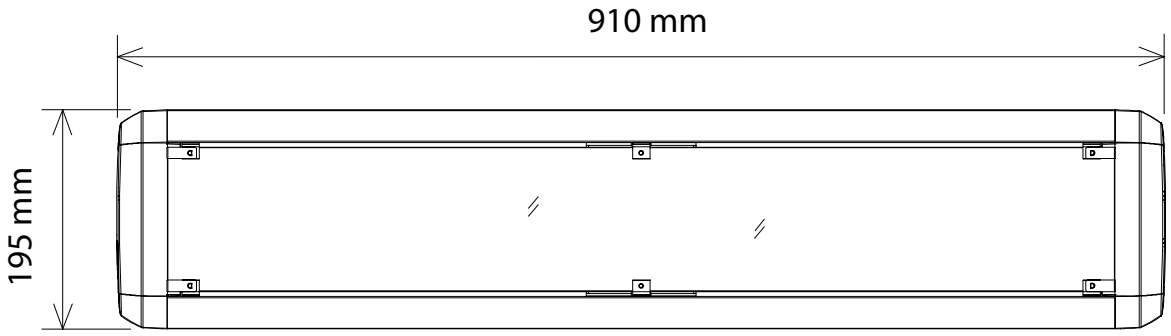

SIDE

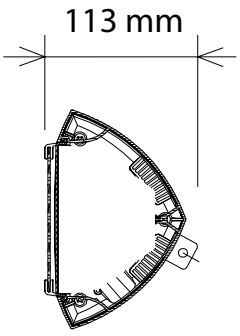

TOP

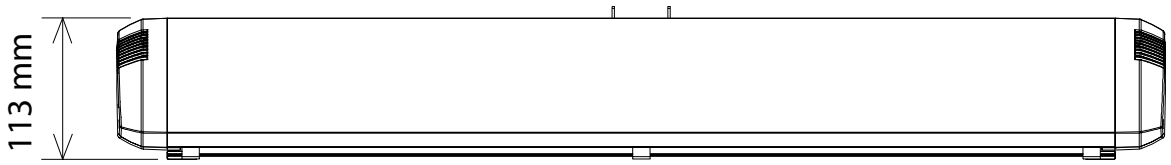

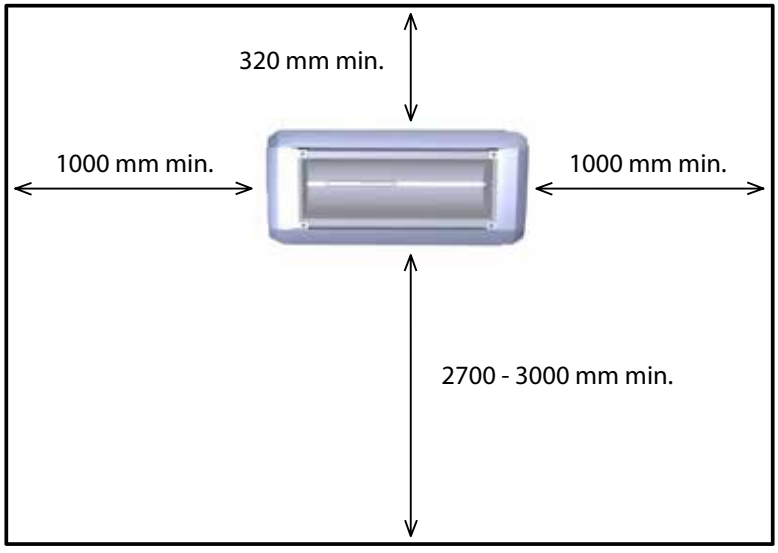

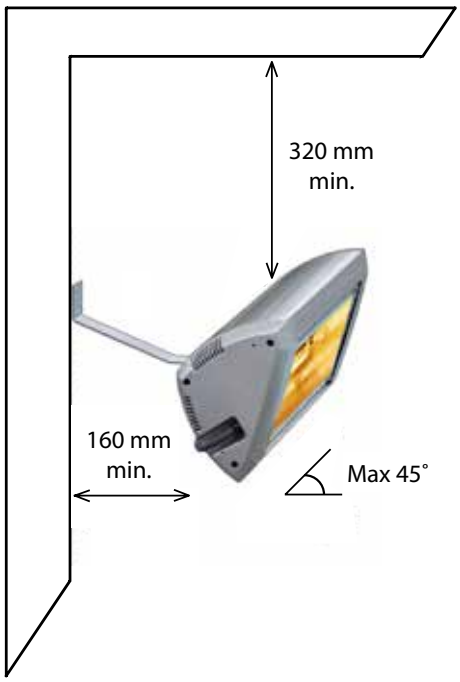

WALL INSTALLATION

Heliosa must be placed perfectly horizontal and outside distances as above.

We reserve the right to alter specifications without notice.