Heliosa 99.2 Waterproof Heater

99/2S40BT - Bluetooth control



WATERPROOF

Blueapp

With the APP, you can:

- Turn the heater on and off
- Gradually adjust the power from 0 to 100% on each heater or simultaneously all heaters connected to the transmitter operating area
- Manage up to 15 heaters
- Customise the heater profiles and set a password
- Set sleep timer

SPECIFICATIONS

Power	4000 Watts
Heated area	40-45 m²
Net weight	4.90 kg
Gross weight	6.40 kg
Warranty	4 Year Parts & 2 Years Labour (Asset must be registered to activate full warranty)

DIMENSIONS

External Width	990
External Height	195
External Depth	113

Main Features

- Heats up to 40-45 square metres
- IPX5 waterproof
- Silver colour
- Oven painted with epoxy powder
- Reflective aluminum reflector
- Power cable length 5 metres
- Suitable for both inside and outside areas
- Bluetooth control via smartphone app
- Remote control

FRONT

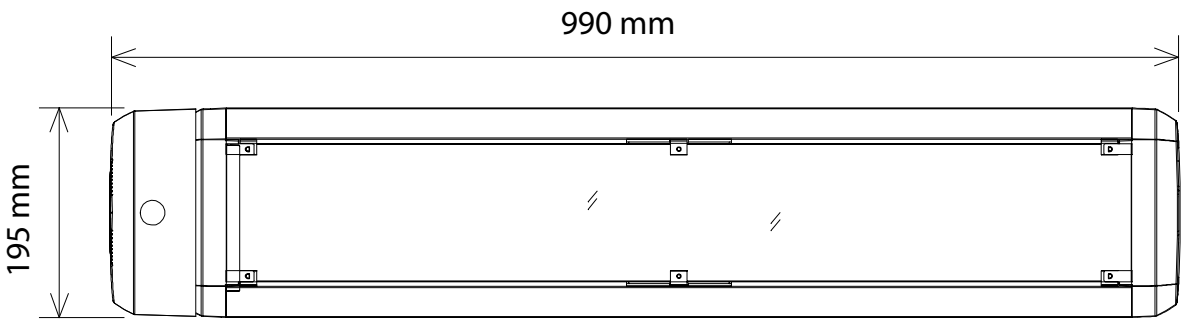

SIDE

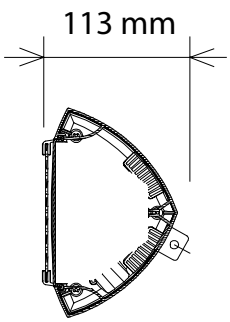

TOP

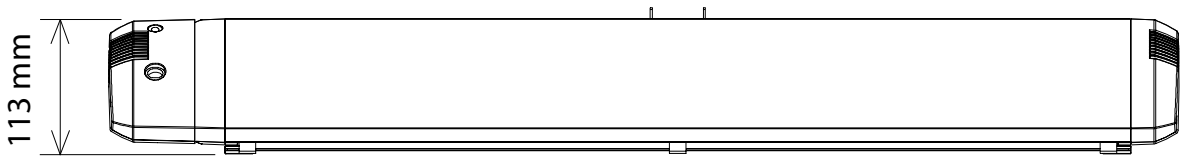

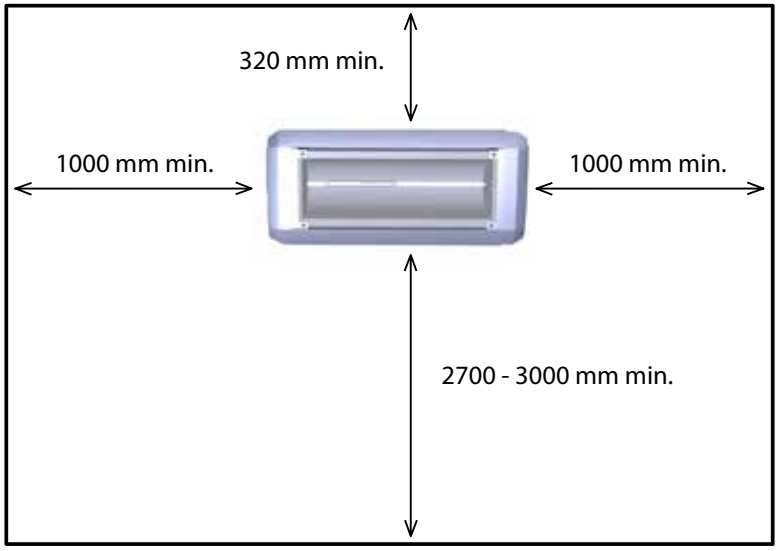

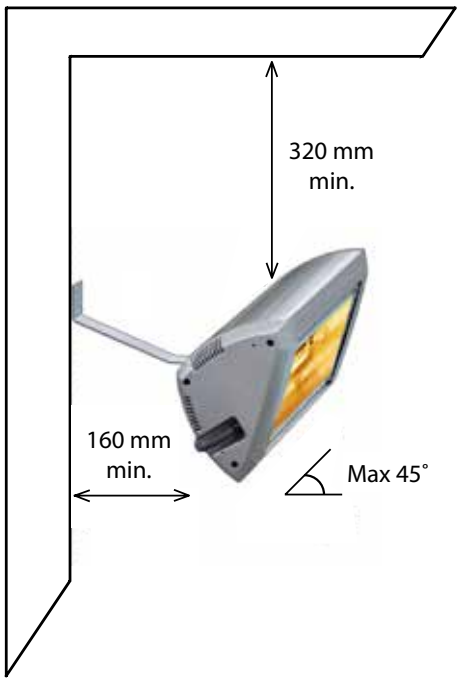

WALL INSTALLATION

Heliosa must be placed perfectly horizontal and outside distances as above.

We reserve the right to alter specifications without notice.