TC 22-32 COLORADO

tritacarne
meat grinders

- *AISI 304 stainless steel construction.*
- *Powerful IP 55 insulated and fan-cooled motors for continuous use.*
- *Endless screw motor-reducer running in an oil-bath enables a long service life .*
- *Motor-reducer equipped with a double seal for long, trouble-free service.*
- *Head can be locked in with no tools.*
- *Stainless steel head with high output capacity, completely removable for cleaning.*
- *Feed tray provided with safety interlock (no. TC 32 CE versions).*
- *IP 54 protected, 24 V controls.*

Optionals:

- *Partial or total Unger system mincing head.*
- *Stainless steel IP 67 protected controls.*

125



TC 32 COLORADO



Optional stuffer kit for TC 22-32

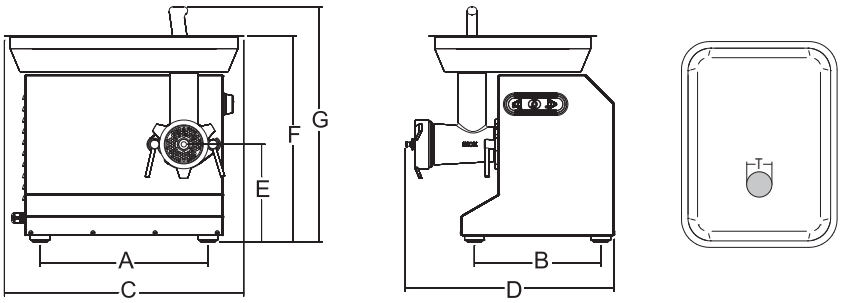

	watt/Hp		kg/h.	ø mm	A mm	B mm	C mm	D mm	E mm	F mm	G mm	T mm	kg	mm	kg
TC 22 Colorado	1ph 1100/1.5 3ph 1.472/2	1ph/3ph	300	4.5	351	264	500	440	144	445	526	50	32	600x500x500	35
TC 32 Colorado	1ph 1840/2.5 3ph 2.200/3	1ph/3ph	400	6	401	264	610	465	110	445	543	77	39	720x570x770	41



Format M opzionale
Optional Format M

