SIGIX M20

sigilla vaschette
thermosealers



- *Practical and robust manual thermosealers*
- *Stainless steel AISI 304 structure*
- *Electronic control with temperature and preheat*
- *counting trays*
- *welding time 4 sec.*
- *Molds to custom design*
- *aluminum plate sealer Teflon*

Options:

- *available trays*
- *mm 137x95 h.63*
- *mm 190x137 h.72*
- *mm 230x190 h.65*
- *mm 260x190 h.65*
- *Molds of the available trays*











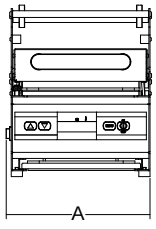

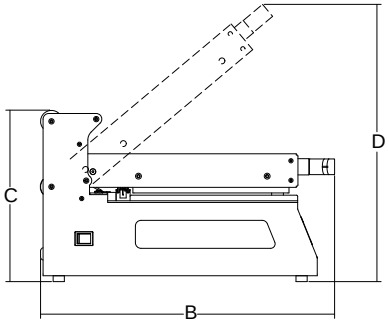

	watt		mm	mm	mm	mm	mm	mm	kg	mm	kg
Sigix M20	900	1ph	200	260x190	257	525	306	496	18	620x380x400	22