SANSONE 52
BENCH PASTRY SHEETER
40105052

Main Features

- Vertical construction that reduces the space taken up on the working counter and facilitates gripping of dough at the outfeed
- Built out of stainless steel
- Ventilated motor in non-stop operating mode with dual reduction
- Coaxial reduction gear + belt transmission
- Adjustable dough thickness 0-10mm
- Infeed area protected with safety microswitch
- Wide chute for dough infeed, easy to remove
- Stainless steel hand protection removable for cleaning
- Perfect also to laminate pizza










Optional pasta cutter

SPECIFICATIONS

Voltage	220-240 Volts
Power	370 W 0.51HP, Single Phase
Weight	69 kg
Roller Diamension	520 mm
Roller Size	Ø 60 x 520mm
Plug Supplied	Yes, 10 amp

ACCESSORIES

40107020	2mm Pasta/Product Cutter
40107040	4mm Pasta/Product Cutter
40107060	6mm Pasta/Product Cutter
40107080	8mm Pasta/Product Cutter
40107120	12mm Pasta/Product Cutter

DIMENTIONS

External Width	800mm
External Depth	322mm

SIDE

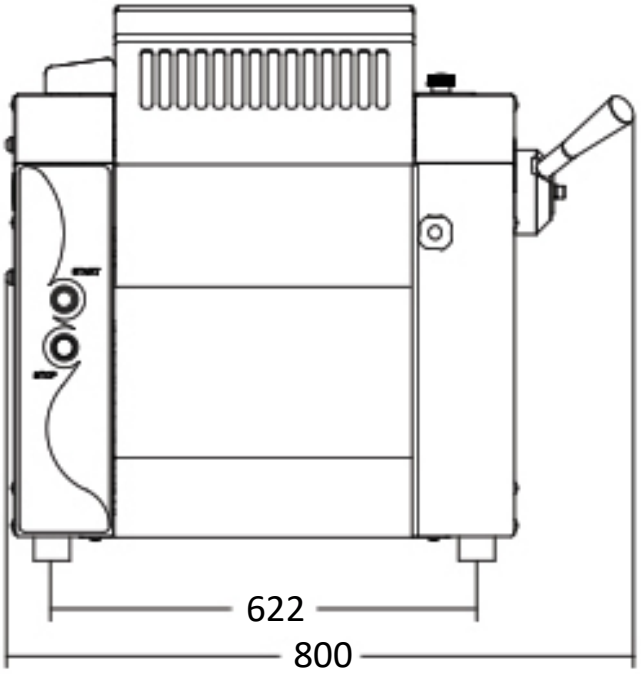

SIDE

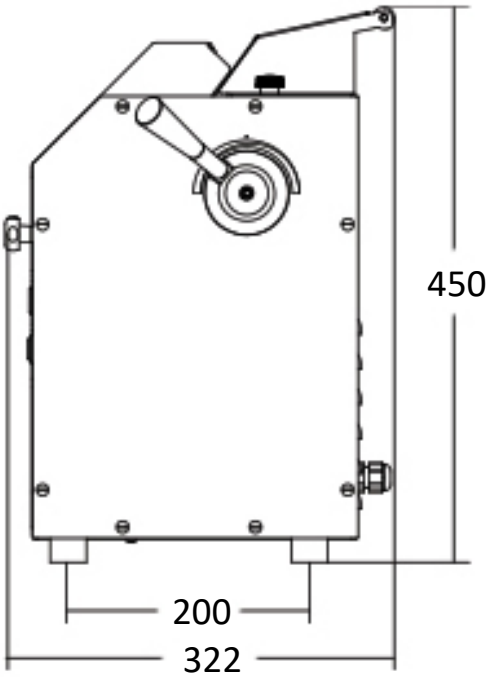

We reserve the right to alter specifications without notice.