SANSONE 25
BENCH PASTRY SHEETER
40080052

Main Features

- Vertical construction that reduces the space taken up on the working counter and facilitates gripping of dough at the outfeed
- Built out of stainless steel
- Ventilated motor in non-stop operating mode with dual reduction
- Coaxial reduction gear + belt transmission
- Adjustable dough thickness 0-10mm
- Infeed area protected with safety microswitch
- Wide chute for dough infeed, easy to remove
- Stainless steel hand protection removable for cleaning
- Perfect also to laminate pizza










Optional pasta cutter

SPECIFICATIONS

Voltage	220 -240 Volts
Power	270 Watts, 0.37 HP, Single Phase
Weight	47 kg
Roller Diamension	250 mm
Roller Size	Ø 60 x 250mm
Plug Supplied	Yes, 10 amp

ACCESSORIES

40107020	2mm Pasta/Product Cutter
40107040	4mm Pasta/Product Cutter
40107060	6mm Pasta/Product Cutter
40107080	8mm Pasta/Product Cutter
40107120	12mm Pasta/Product Cutter

DIMENTIONS

External Width	515mm
External Depth	322mm

SIDE

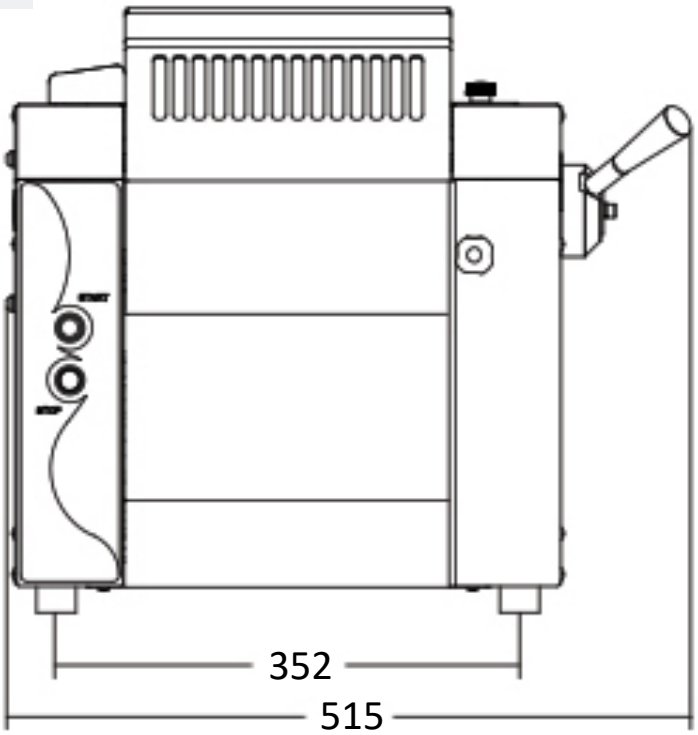

SIDE

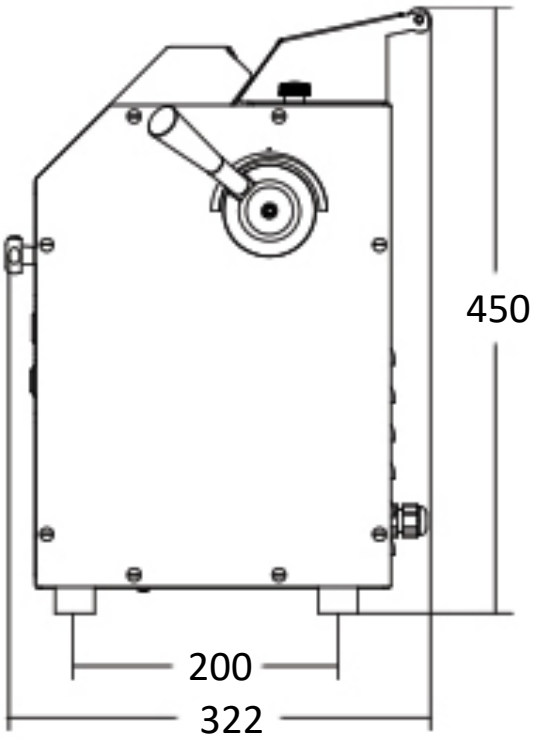

We reserve the right to alter specifications without notice.