SIRMAN PPJ20
POTATO PEELERS
41002003F

Main Features

- AISI Stainless steel body
- Transmission system with self-tensioning belt Poli - V
- High efficiency ventilated motors for continuous operation
- Stainless Steel peeling disc
- Patented removable dishwashing safe container and bottom peeling disc (no tools required).
- Easy to replace abrasive surface
- PP abrasive walls with easily replaceable mantle by the operator
- Stainless steel outlet opening with quick and sealed locking
- Microswitch on the lid
- Microswitch on outlet opening
- S/S trestle and sieve for filter catchment
- Easy service and easy access to the Components
- Automatic unloading system
- Fast water inlet connection
- Adjustable S/S feet can be fixed to the floor









SPECIFICATIONS

Voltage	400-415V
Power	1102 Watts, 1.5HP, 3 phase
Speed	275 RPM
Weight	68 kg
Plug Supplied	NO
Capacity	20 kg
Volume	35 L
Production	340 kg/hr

DIMENTIONS

External Width	560mm
External Depth	880mm

FRONT

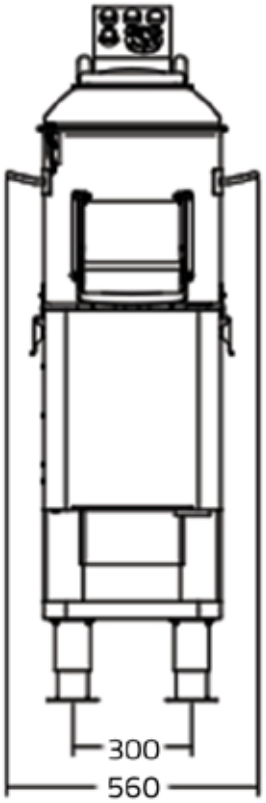

SIDE

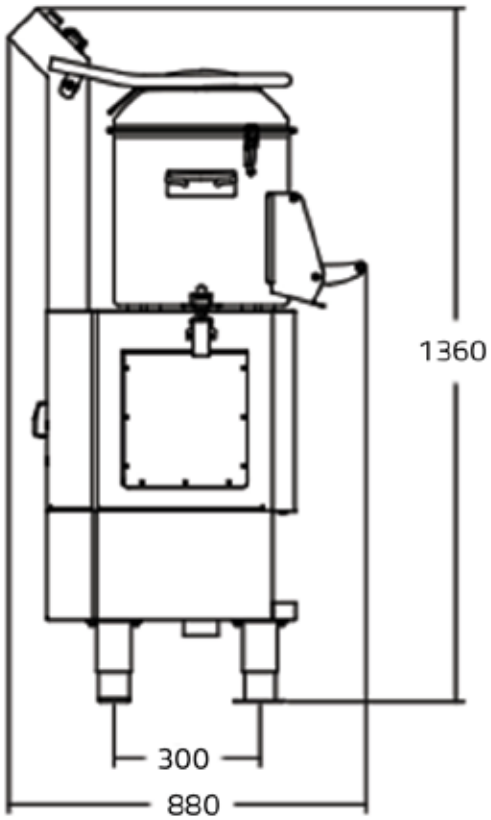

We reserve the right to alter specifications without notice.