SIRMAN PPJ6
POTATO PEELERS
41000602

Main Features

- AISI Stainless steel body
- Transmission system with self-tensioning belt Poli - V
- High efficiency ventilated motors for continuous operation
- Easy to replace abrasive surface.
- Stainless peeling disc
- PP abrasive walls with easily replaceable mantle by the operator
- Patented removable dishwashing safe container and bottom peeling disc (no tools required)
- Stainless steel outlet opening with quick and sealed locking
- Microswitch on the lid
- Microswitch on outlet opening



SPECIFICATIONS

Voltage	220-240 Volts - 50- 60Hz
Power	0.5HP, 370 Watts, Single Phase
Speed	320 RPM
Weight	42 kg
Plug Supplied	Yes 10 amp plug
Capacity	6 kg
Volume	10 L
Production	105kg/hr





DIMENTIONS

External Width	400mm
External Depth	550mm

FRONT

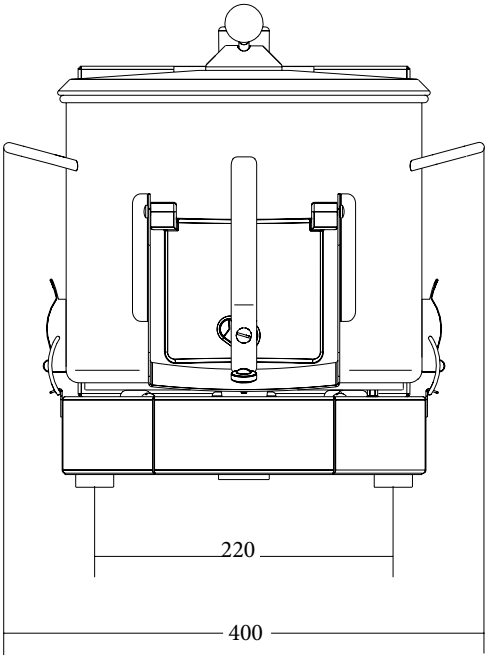

SIDE

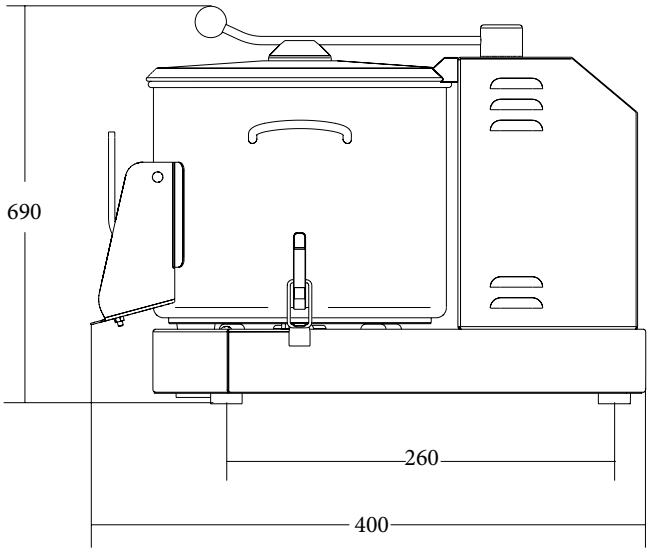

We reserve the right to alter specifications without notice.