PD POWER
sandwich grills



- *Self balancing upper plate.*
- *Shock-proof coated heating elements, adherent to the plates for a perfect thermal conductivity.*
- *Adjustable thermostat up to 300° C.*
- *Heavy-duty machine.*
- *Thermally protected heating elements.*
- *Comes with 2 timers.*
- *Higher legs to keep your counter under the unit clean.*
- *Detachable front drip tray.*
- *Removable hinges cover.*
- *Comes with side spacers.*

PD POWER RR-RR TIMER

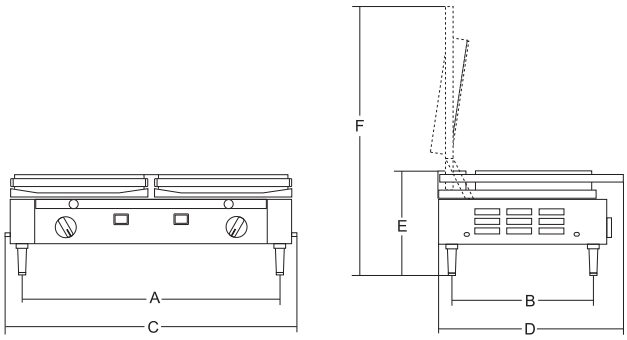

				A	B	C	D	E	F			
	watt		*mm*	*mm*	*mm*	*mm*	*mm*	*mm*	*mm*	*kg*	*mm*	*kg*
PD Power	4.500	3ph	500x255	475	275	545	435	300	660	33	560x540x300	35







Models key