P-Roll Dough Rollers

Sirman



SPECIFICATIONS

Model	320/1 Plus	320/2 Plus	420 RP Plus
Voltage	220-240 volts	220-240 volts	220-240 volts
Power	330 Watts	330 Watts	330 Watts
Gross Weight	32 kg	40 kg	48 kg
Net Weight	29 kg	40.5 kg	48.5 kg
Plug Supplied	Yes, 10 amp plug (all models)		
Dough Weight	80-210 grams	80-210 grams	210-700 grams
Pizza Diameter	140-290 mm	260-400 mm	260-400 mm
Warranty	4 Year Parts & 2 Years Labour (Asset must be registered to activate full warranty)		

Main Features

- Thickness adjusting knobs in aluminum
- Heavy duty metal gear transmission
- Easy to remove roller scrapers for sanitisation
- Interlocked and easy to remove top and bottom roller guards
- Removable ceramic slider for fast and effective sanitisation
- IP67 rated s/steel switch, no volt release
- Pedal supplied as standard
- Unbreakable industrial grade toothed belt

DIMENSIONS

Model	320/1 Plus	320/2 Plus	420 RP Plus
External Width	485	485	585
External Height	395	715	700
External Depth	460	460	460
Roller Dimensions	320mm (bottom)	320mm (bottom)	420mm (bottom)
		220mm (top)	320mm (top)



FRONT

SIDE

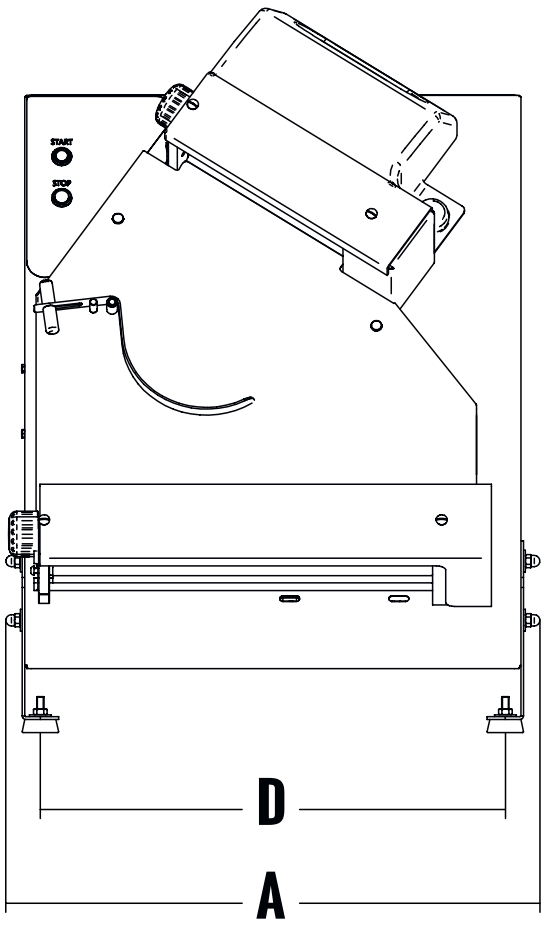

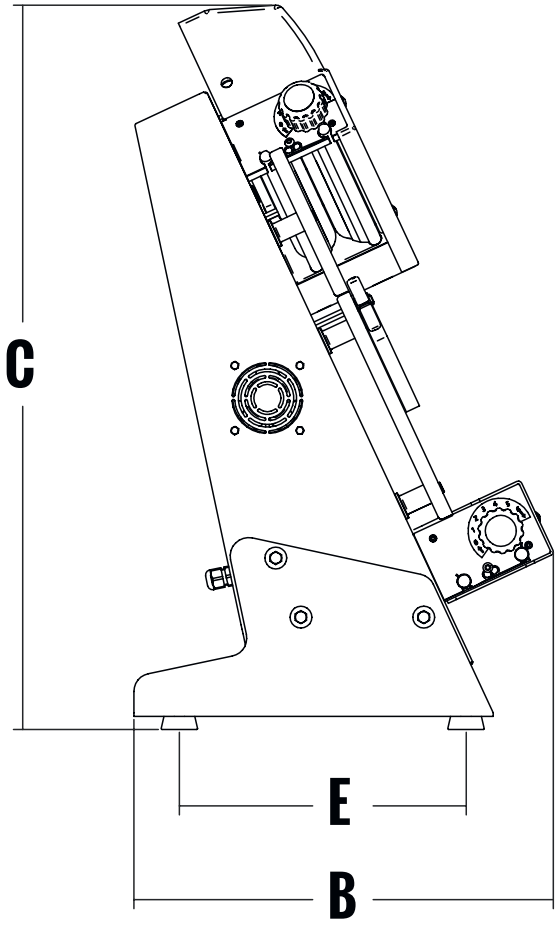

	A	B	C	D	E
	mm	mm	mm	mm	mm
P-ROLL 320/1 Plus	487	462	393	411	315
P-ROLL 320/2 Plus	487	462	716	411	315
P-ROLL 420 RP Plus	587	462	700	5113	15

We reserve the right to alter specifications without notice.

20 mm feet supplied as standard