MULTIPATTY
hamburger presses

- *Practical and robust hamburger press with changeable moulds*
- *Made of anodised aluminium and stainless steel*
- *Self-centring moulds (Patented system) for perfect coupling of mould with buffer*
- *Machine supplied without moulds; allows you to select the moulds you require separately*
- *Automatic hamburger lifting system for easy removal of pieces*

Optionals:

- *Changeable moulds in diameter sizes Ø mm 100, 130,150, 180*









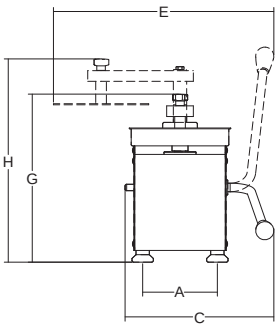

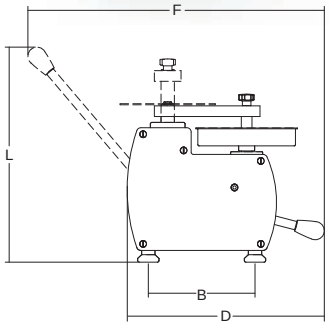

	⌀	A	B	C	D	E	F	G	H	L	KG
	mm	*mm*	*mm*	*mm*	*mm*	*mm*	*mm*	*mm*	*mm*	*mm*	*kg*
Multipatty	-	140	200	279	369	-	556	315	381	404	7.5
***Mould* 100**	100	-	-	-	-	373	-	-	-	-	1
***Mould* 130**	130	-	-	-	-	388	-	-	-	-	1.05
***Mould* 150**	150	-	-	-	-	398	-	-	-	-	1.1
***Mould* 180**	180	-	-	-	-	413	-	-	-	-	1.2

Optional changeable moulds





