MASTER

meat grinders - meat mixers

- *AISI 304 stainless steel construction, can be sprayed.*
- *2 indipendent IP x5 motors for grinder and mixer:*
- *5 Hp or 7Hp meat grinder motors (42 model)*
- *5 Hp or 7Hp meat grinder motors (42 model)*
- *4 Hp meat grinder motor (32 model)*
- *Oil-bath, waterproof angular gear box*
- *Safety microswitch on meat mixer cover*
- *Air pistons open the cover*
- *IP 67 stainless steel controls (reverse available for grinder)*
- **Grinding set:**
- *Completely made of AISI 304 stainless steel*
- *Designed for high performance*
- *Stainless steel drive pin.*
- *Tempered steel worm pin.*
- *Grinding set and mixing arm can be easily disassembled without tools*
- *Exclusive, patented plate and knife detection system*

Standard accessories:

- *Stainless steel self-sharpening knife and 4,5 mm plate*
- *Floor support with stainless steel wheels and brake*
- *Worm and plate removing tool*

BREVETTATO
PATENTED



MASTER 90 Y 12









> Optional: interlock protection for more than 8 mm holes plates.

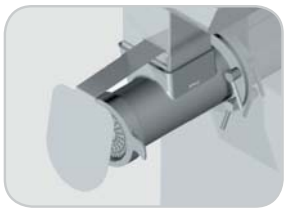

Optional: splash guard



Lid with self lifting



Full Control system (for Format S-A)



Optional pedal controls



P. 121



Timer function
Reverse with timer for meat mixer
Optional connections for:
- pedal controls
- Format S - semi-automatic hamburger press attachment
- Format A - automatic hamburger press attachment.

Optional available:

- *Stainless steel splash guard*
- *mouth guard interlocked for plates with 8> mm*
- *Stainless steel 1/2 or total unger grinding set*

FULL CONTROL:







Plates removal tool



Standard o enterprise | 1/2 Unger | Unger Totale



MASTER 90 Y 12

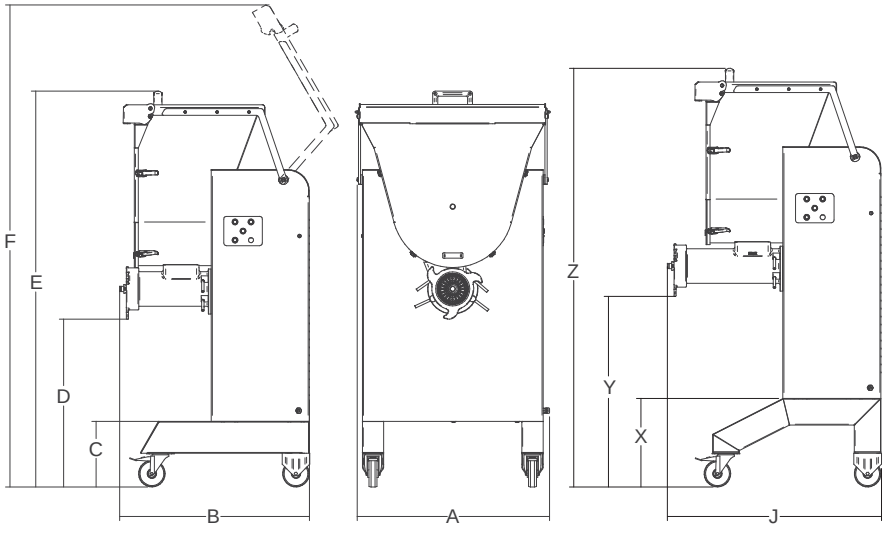

MASTER 90 Y12
optional high legs
X: 333 mm / Y: 717 mm
Z: 1575 mm / J: 806 mm

	TC	IP			ø mm	r.p.m.	kg/h.	A	B	C	D	E	F	KG		
	watt/Hp	*watt/Hp*		*kg/lt*	*ø mm*	*r.p.m.*	*kg/h.*	*mm*	*mm*	*mm*	*mm*	*mm*	*mm*	*kg*	*mm*	*kg*
Master 30 Y12	2940/4	1102/1,5	1ph/3ph	30-42	4.5	TC200/ IP30	600-850	644	658	247	589	1243	1477	140	870x840x1700	165
Master 60	2940/4	1102/1,5	1ph/3ph	60-80	4.5	TC186/ IP30	850-1000	670	732	247	655	1416	1694	160	870x840x1700	185
Master 90 Hp 5 Y12	3675/5	1102/1.5	1ph/3ph	90-120	4.5	TC186/ IP30	1000-1200	724	714	247	631	1489	1813	191	870x840x1700	216
Master 90 Hp 7 Y12	5145/7	1102/1.5	1ph/3ph	90-120	4.5	TC186/ IP30	1000-1200	724	714	247	631	1489	1813	191	870x840x1700	216