MANTEGNA

- *Innovative rounded design and no sharp edges or visible screws*
- *Chrome plated ground and lapped slide rod*
- *Self lubricating slide rod bushings*
- *Vulcanised rubber stops on carriage*
- *Removable support cover for thickness gauge plate*
- *Stainless steel slice deflector with snap-on bayonet fitting*
- *Stainless steel screws and fittings*
- *Bottom cover for accessing electrical components*
- *Stainless steel pushbuttons with IP67 protection rating*
- *Built in sharpening tool with bottom protection*
- *Enclosed and sealed belt pulley*
- *48 mm distance between blade and motor*
- *Standard Blade Removal Tool (BRT)*

MANTEGNA
- *Plastic knobs*
- *Rubber feet*

MANTEGNA TOP
- *Knobs aluminum*
- *Aluminium telescopic feet with rubber base*
- *Maintenance tool kit*

MANTEGNA VCO
- *Specially required by the Northern European marketplace*
- *Product table designed to slice all types of products*
- *Removable aluminum end weight*
- *Designed with grooves: nails underneath*
- *Avaialble with double articulating arm on end weight*



MANTEGNA 300 BS1 TOP





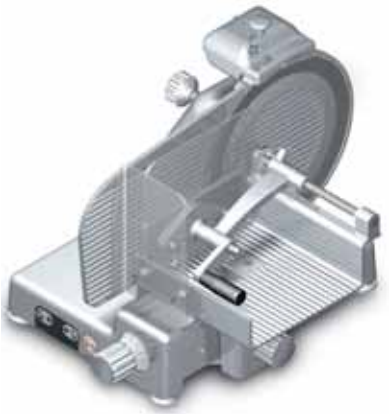



Removable food pusher BS1

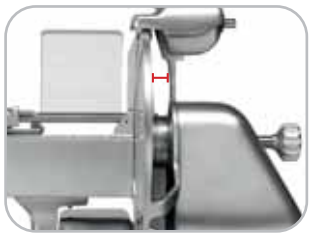

More space between blade and body machine



Removable food pusher VCS



Standard controls

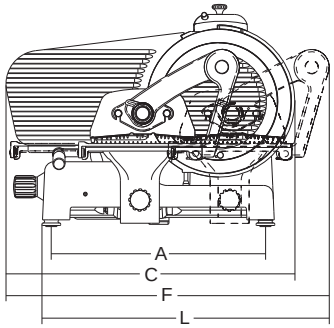

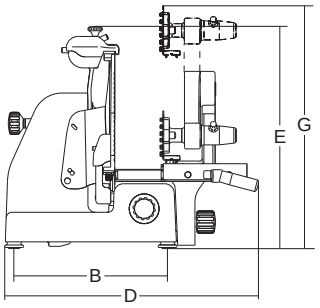

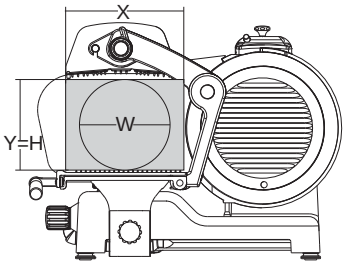

						A	B	C	D	E	F	G	L	X	Y	H	W	KG		
	mm-inch	*watt-Hp*	*mm*	*mm*	*mm*	*mm*	*mm*	*mm*	*mm*	*mm*	*mm*	*mm*	*mm*	*mm*	*mm*	*mm*	*mm*	*kg*	*mm*	*kg*
Mantegna 300 BS1	300/12"	275/0,37	29	310	300x270	468	338	635	600	500	750	695	650	270	230	230	230	36.5	870x840x750	51.5
Mantegna 300 VCS	300/12"	275/0,37	29	310	340x250	468	338	635	685	500	720	560	610	250	225	225	225	36	870x840x750	52
Mantegna 300 VCO	300/12"	275/0,37	29	310	280x260	468	338	635	652	500	677	520	610	260	230	230	230	35	870x840x750	50
Mantegna 300 VCO BM	300/12"	275/0,37	29	310	280x260	468	338	635	585	500	677	660	610	260	230	230	230	36	870x840x750	51
Mantegna 330 BS1	330/13"	275/0,37	29	310	300x270	468	338	645	600	515	750	705	630	270	245	245	245	37	870x840x750	52
Mantegna 330 VCS	330/13"	275/0,37	29	310	340x250	468	338	645	685	515	720	560	580	250	235	235	235	37	870x840x750	53
Mantegna 330 VCO	330/13"	275/0,37	29	310	280x260	468	338	645	652	515	677	520	585	260	245	245	245	36	870x840x750	51
Mantegna 330 VCO BM	330/13"	275/0,37	29	310	280x260	468	338	645	585	515	677	660	585	260	245	245	245	37	870x840x750	52
Mantegna 350 BS1	350/14"	370/0,50	29	310	300x270	468	338	660	600	530	750	715	630	270	255	255	255	38	870x840x750	53
Mantegna 350 VCS	350/14"	370/0,50	29	310	340x250	468	338	660	685	530	720	560	580	250	245	245	245	38	870x840x750	54
Mantegna 350 VCO	350/14"	370/0,50	29	310	280x260	468	338	660	652	530	677	520	585	260	255	255	255	38	870x840x750	53
Mantegna 350 VCO BM	350/14"	370/0,50	29	310	280x260	468	338	660	585	530	677	660	585	260	255	255	255	38	870x840x750	53

TOP



