KATANA 20VV
BOWL CUTTERS
40795152

Main Features



- 20 Litre Variable Speed Bowl Cutter
- Continuous speed control controlled by inverter.
    - Three-phase motor power supply single-phase
    - Gearmotor freestanding tub.
- Completely made in AISI 304 stainless steel
- Blade driven by powerful ventilated asynchronous motor
- Sturdy, removable AISI 304 stainless steel bowl
- Stainless steel lid with high resistance hood in Triton
- Easily removable interlocking lid to facilitate cleaning and sanitising
- Controls with IP67 stainless steel buttons
- Easily removable blade hub with 3 blades standard (configurable to 2 blades)
- Dedicated knives available for specialpurposes
- Maximum protection against liquid infiltration on the shaft
- Perfect for meat, fish and vegetables, but also suitable for many other
- Completely disassemble for Cleaning types or processing





SPECIFICATIONS

Voltage	220-240 Volts
Power	2387 Watts / 3.25 HP, Single Phase
Speed	600-2600 RPM Variable Speed
Weight	93 kg
Plug Supplied	Yes, 10 amp
Capacity	20 L
Blades	3

ACCESSORIES

Stand to suit
Choice of 3 Blades

DIMENTIONS

External Width	1013mm
External Depth	700mm

FRONT

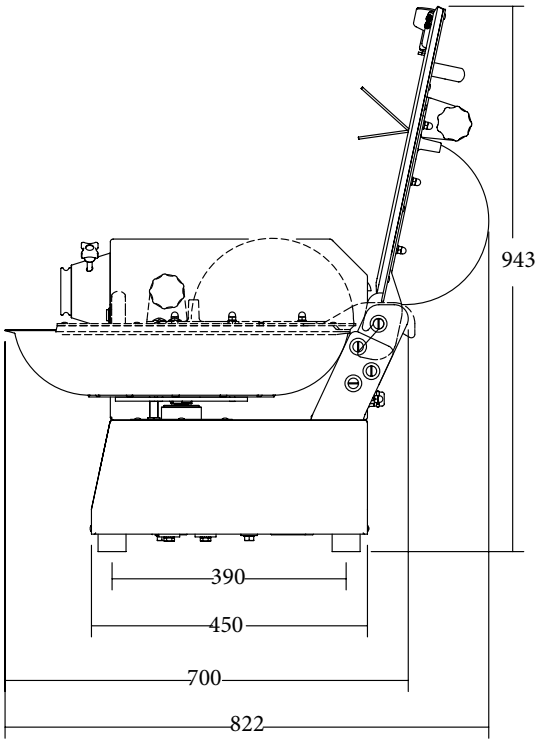

SIDE

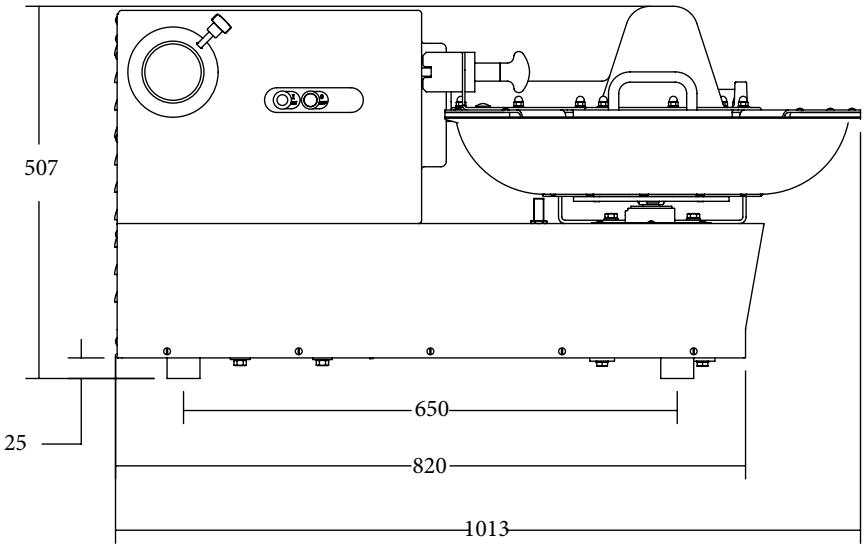

We reserve the right to alter specifications without notice.